REINFORCING BAR SCHEDULE

BAR	TYPE	SIZE	QTY	SPACING	LENGTH	WEIGHT(LBS)	TYPE	SIZE	QTY	SPACING	LENGTH	WEIGHT(LBS)
A	BT	4	13	12" MAX	5'-1 1/2"	45	BT	4	18	12" MAX	5'-1 1/2"	62
B	BT	4	7	12" MAX	4'-6"	23	BT	4	12	12" MAX	4'-10"	40
C	BT	4	6	10" MAX	4'-9"	19	BT	4	13	10" MAX	4'-9"	42
D	BT	4	4	12" MAX	7'-6"	20	BT	4	4	12" MAX	12'-6"	34
Ø E	BT	5	8	6" MAX	3'-8"	31	BT	5	18	6" MAX	3'-8"	70
F	BT	4	10	12" MAX	7'-6"	50	BT	4	10	12" MAX	12'-6"	84
F1	STR	5	5	–	5'-10"	31	STR	7	5	–	10'-10"	57
Ø G	STR	5	9	6" MAX	3'-2"	54	STR	5	19	6" MAX	3'-2"	114
H	BT	4	10	7" MAX	2'-8 3/4"	18	BT	4	20	7" MAX	2'-8 3/4"	36
Ø J	STR	5	7	6" MAX	5'-6"	40	STR	5	7	6" MAX	10'-6"	80
** M	STR	7	1	–	20'-0"	41	STR	7	1	–	20'-0"	41
N	BT	4	8	12" MAX	4'-10"	26	BT	4	8	12" MAX	4'-10"	26
		TOTAL WEIGHT (LBS)				398		TOTAL WEIGHT (LBS)				686
	5' RECESSED INLET						10' RECESSED INLET					

** BARS M ARE #7 (STRAIGHT) CUT TO FIT IN FIELD.

NOTE:

LENGTH OF BARS J, G, AND E IN TABLES IS GIVEN FOR BID PURPOSES.
THESE BARS MAY BE CUT AS REQUIRED TO FIT AT MANHOLE.

NOTES (APPLY UNLESS OTHERWISE SHOWN OR NOTED):

1. CONCRETE SHALL BE CLASS "C".
2. ALL REINFORCING BARS SHALL BE ASTM A615 GR. 60.
3. LATERAL PIPE MAY ENTER INLET THROUGH ANY WALL.
4. CAST IRON FRAME & COVER SHALL BE BASS & HAYS #184L.
5. ALL CONSTRUCTION JOINTS (CJ) ARE PERMISSIBLE, NOT MANDATORY. CONSTRUCTION JOINTS MAY BE KEYED AT CONTRACTOR'S DISCRETION.
6. CHAMFER ALL EXPOSED EDGES AROUND INLET OPENINGS 3/4".
7. LOADING: (UNFACTORED LOADING)
   WHEEL LOAD HS20: 16 KIPS.
   LATERAL SOIL PRESSURE: 30 PSF/FT.
   LATERAL HYDROSTATIC PRESSURE = 64 PSF/FT.
   SURCHARGE LATERAL PRESSURE 2 FT = 60 PSF.
8. IF 20' INLET IS DESIRED, USE 2-10' INLETS WITH INTERIOR WALL AS SHOWN ON SECTIONS A-A & B-B IN THE 15' INLET STANDARD DRAWING.
9. 2000 PSI CLASS B CONCRETE - WRAP TO SUIT CONDITIONS.
10. REINFORCING DIMENSIONS ARE TO CENTER OF BAR UNLESS OTHERWISE NOTED.
11. ALL INLETS SHALL BE CLASS 'C' CAST-IN-PLACE (UNLESS AUTHORIZED BY CITY OF GARLAND).

1/7

Revision Date: 07/07

Scale : N/A Date : 06/01/05	GARLAND ENGINEERING STANDARD DETAILS	INLET DETAILS 5' AND 10' STANDARD AND RECESSED	PAGE 1
Design :			
Drawn : GAV			
Dwg. File : REC_001.DWG			
Project No. : STANDARD-DETAILS			

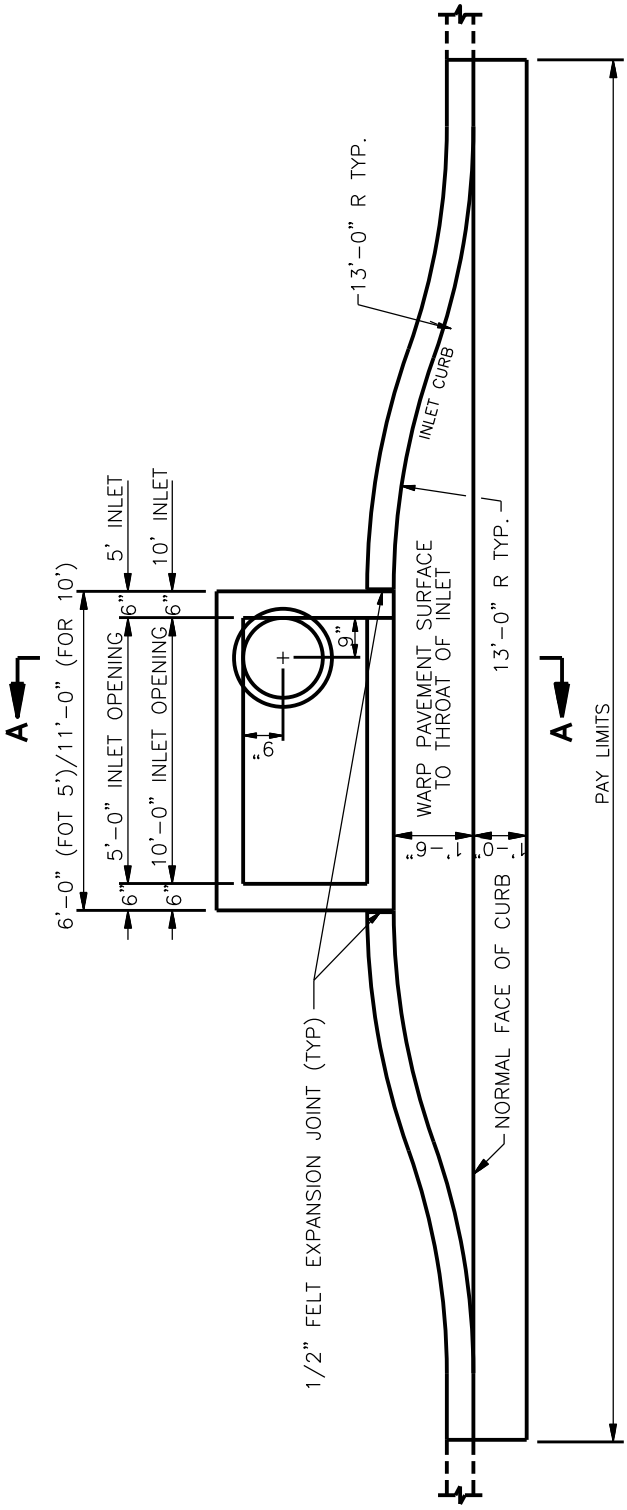

RECESSED PLAN

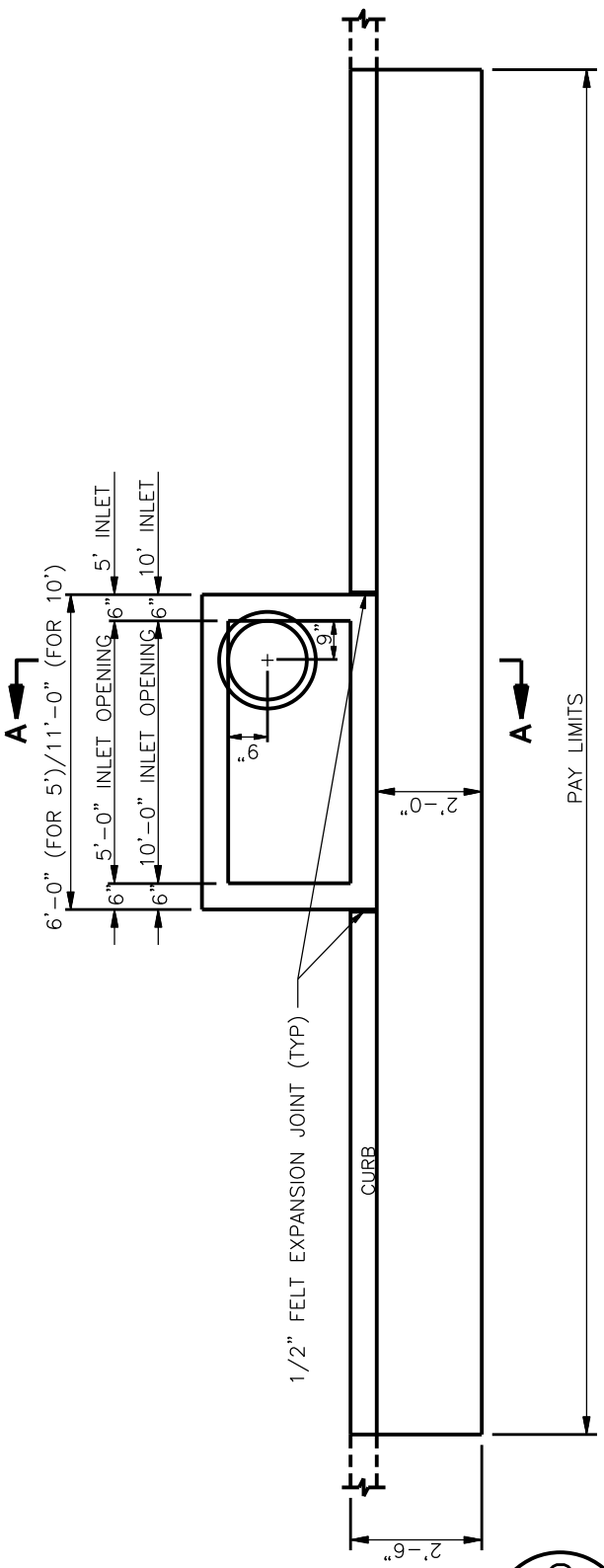

STANDARD PLAN

2/7

Revision Date: 01/06

Scale : N/A Date : 06/01/05	GARLAND ENGINEERING STANDARD DETAILS	INLET DETAILS 5' AND 10' STANDARD AND RECESSED
Design :		
Drawn : GAV		
Dwg. File : REC_001.DWG		
Project No. : STANDARD-DETAILS		

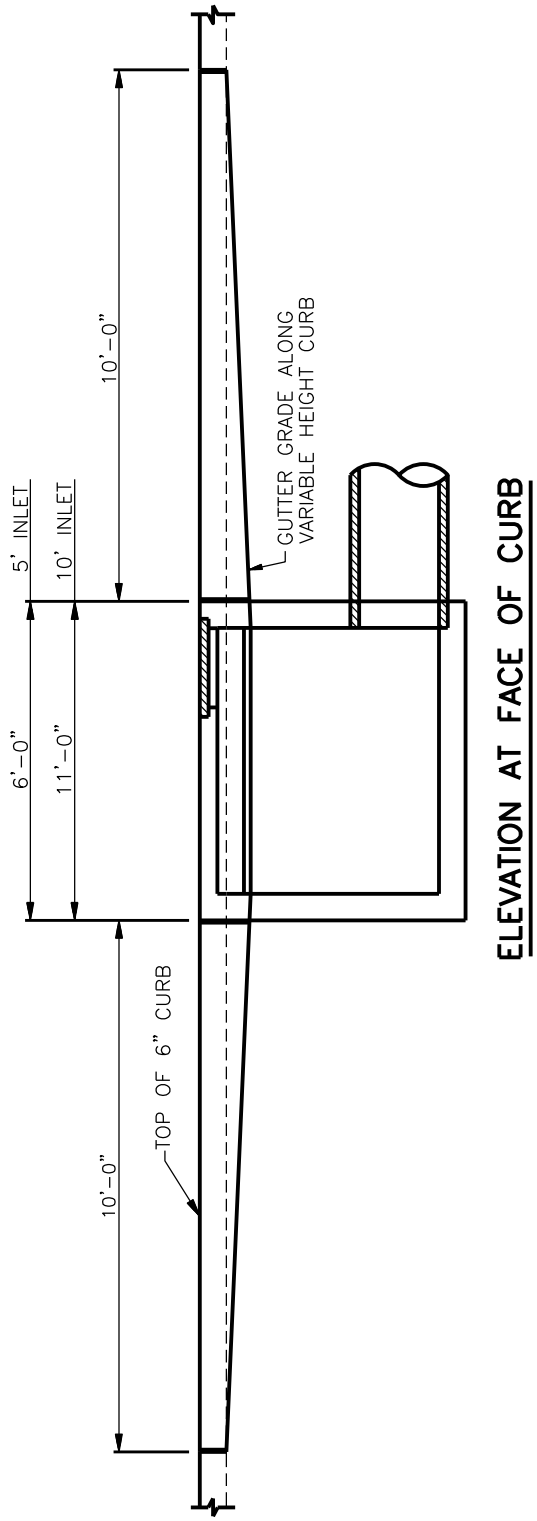

3
7

Revision Date:

Scale : N/A Date : 06/01/05	GARLAND ENGINEERING STANDARD DETAILS	INLET DETAILS 5' AND 10' STANDARD AND RECESSED
Design :		
Drawn : GAV		
Dwg. File : REC_001.DWG		
Project No. : STANDARD-DETAILS		

PAGE 3

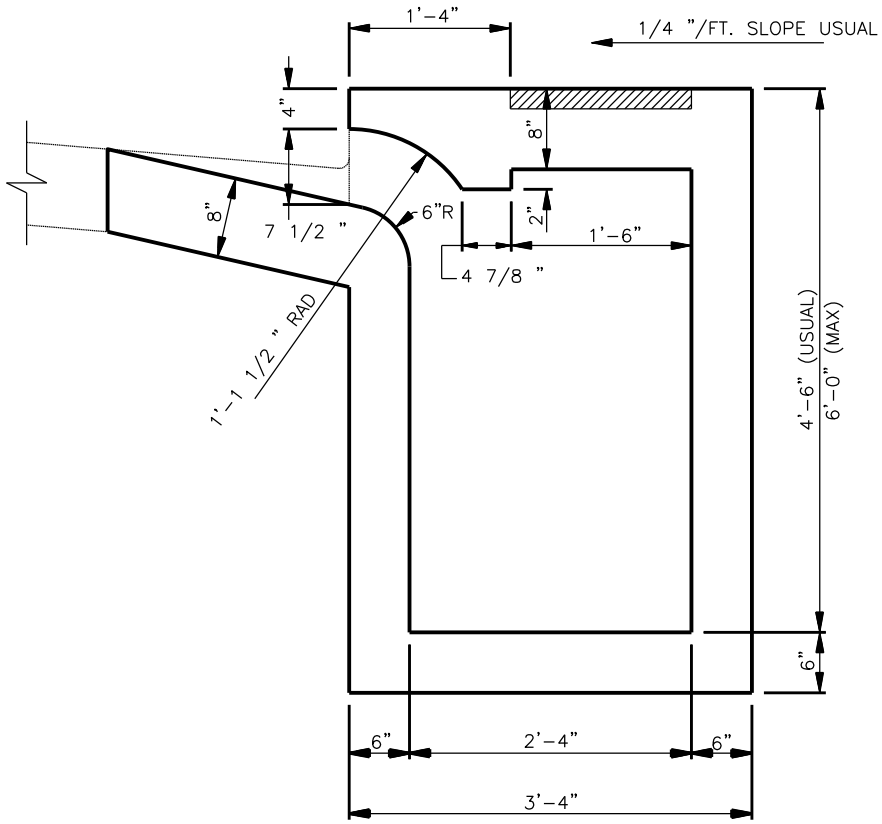

SECTION A-A

DIMENSIONAL SCHEMATIC

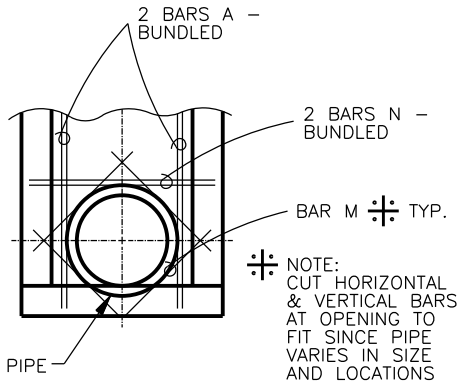

SECTION E-E

FRAMING AT OUTFLOW

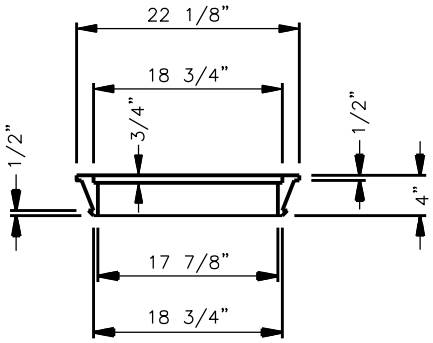

INLET FRAME & COVER

SECTION

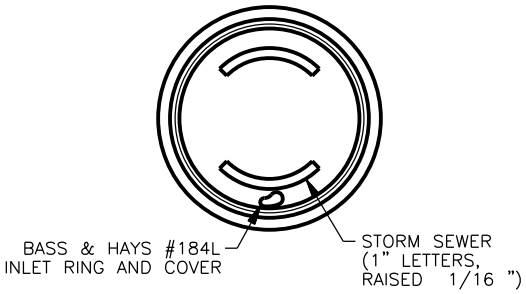

PLAN

4/7

Revision Date: 12/12

Scale : N/A Date : 06/01/05	GARLAND ENGINEERING STANDARD DETAILS	INLET DETAILS 5' AND 10' STANDARD AND RECESSED	PAGE 4
Design :			
Drawn : GAV			
Dwg. File : REC_001.DWG			
Project No. : STANDARD-DETAILS			

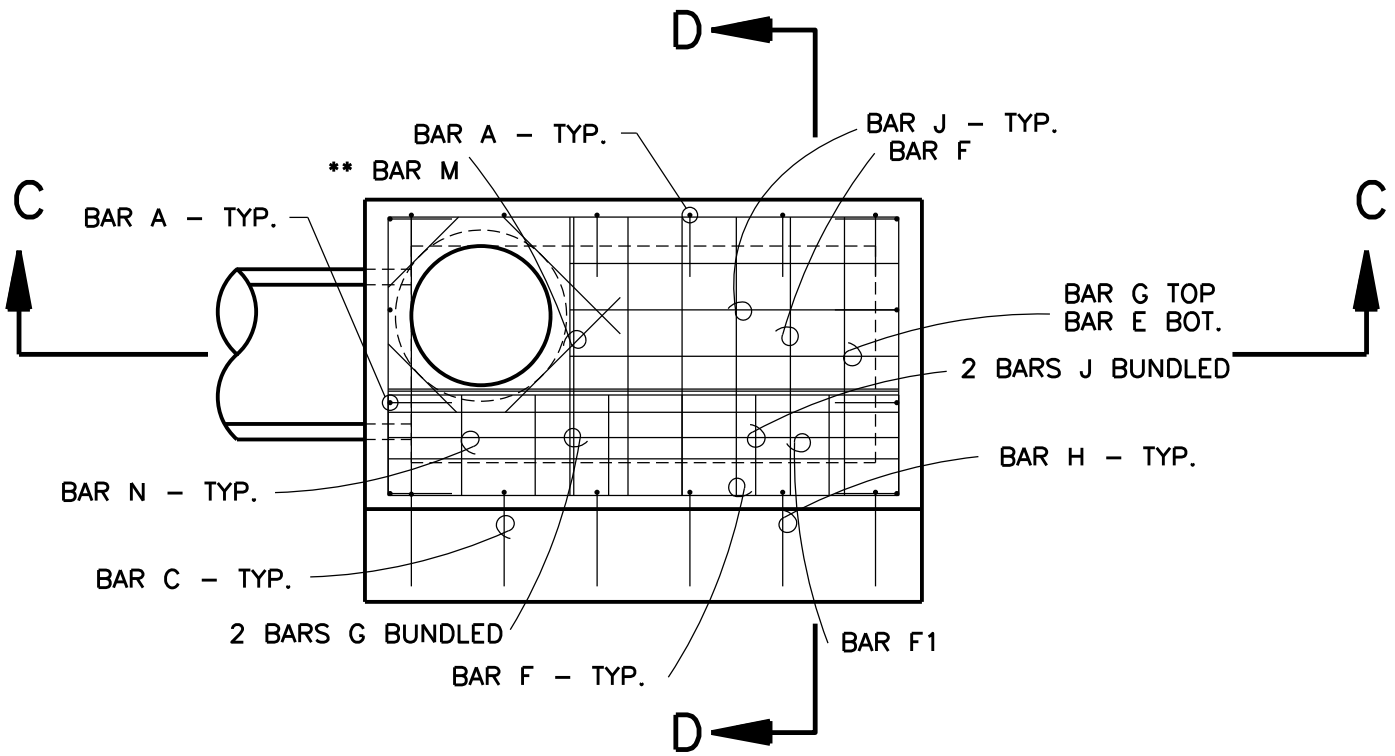

PLAN

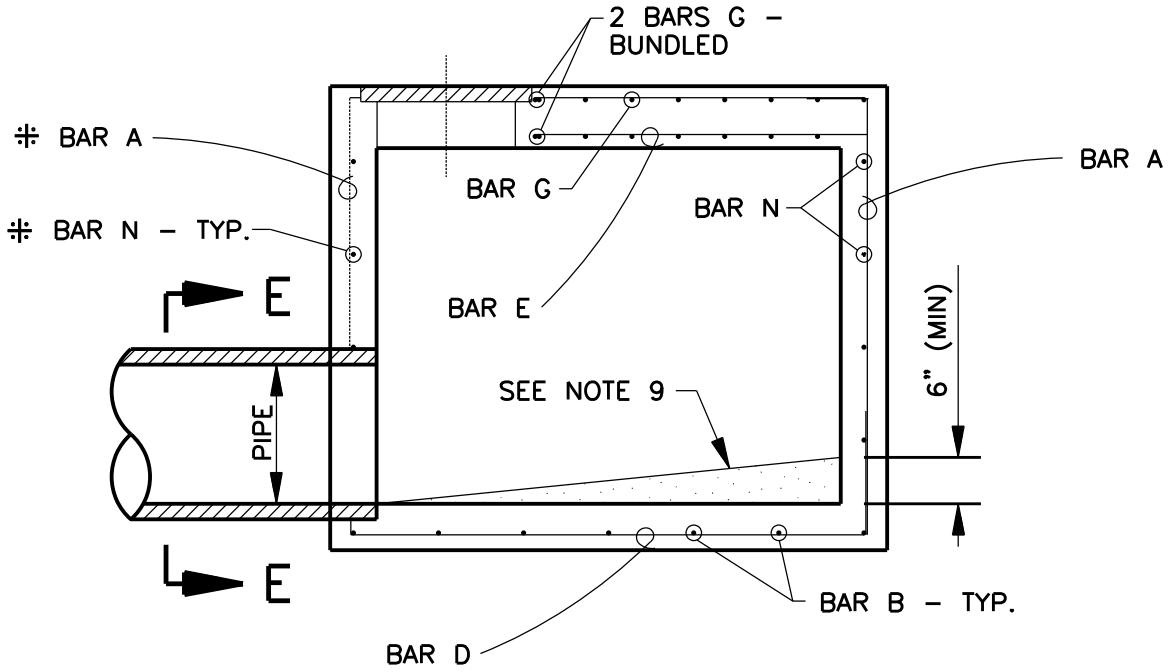

SECTION C–C
REINFORCING BAR LOCATIONS

5
7

Revision Date:			
Scale : N/A Date : 06/01/05	GARLAND ENGINEERING STANDARD DETAILS	INLET DETAILS 5' AND 10' STANDARD AND RECESSED	PAGE 5
Design :			
Drawn : GAV			
Dwg. File : REC_001.DWG			
Project No. : STANDARD–DETAILS			

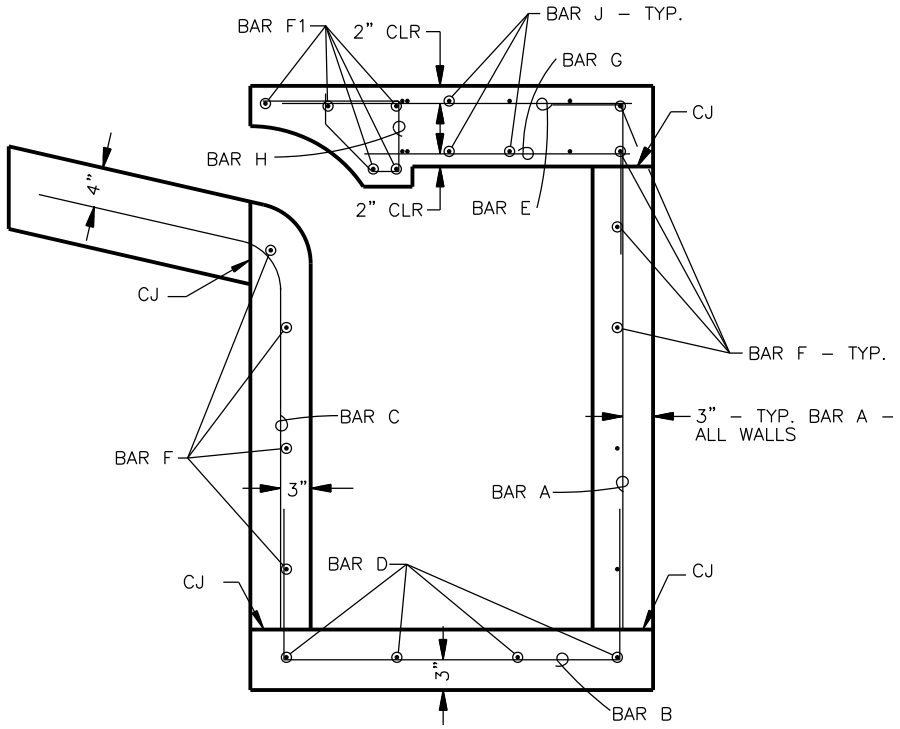

CJ = PERMISSIBLE CONSTRUCTION JOINT – SEE NOTE 5

SECTION D–D

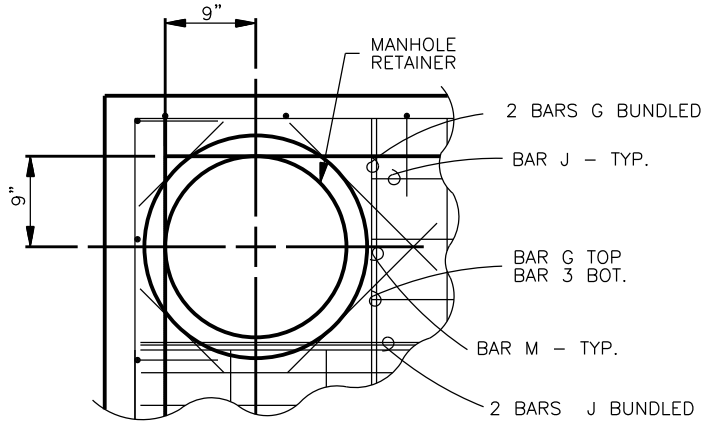

MANHOLE REINFORCING DETAIL

REINFORCING BAR LOCATIONS

6
7

Revision Date:			
Scale : N/A Date : 06/01/05	GARLAND ENGINEERING STANDARD DETAILS	INLET DETAILS 5' AND 10' STANDARD AND RECESSED	PAGE 6
Design :			
Drawn : GAV			
Dwg. File : REC_001.DWG			
Project No. : STANDARD–DETAILS			

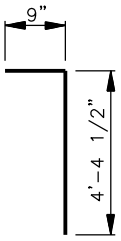

BAR A

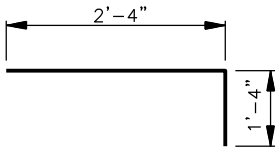

BAR E

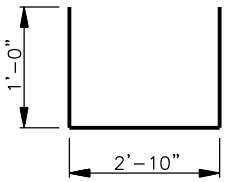

BAR B

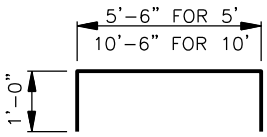

BAR F

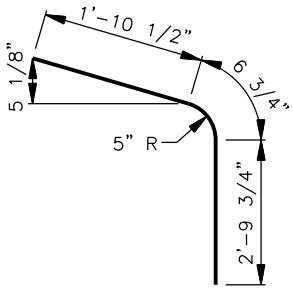

BAR C (STANDARD)

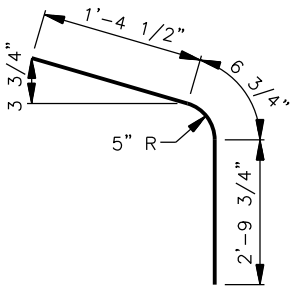

BAR C (RECESSED)

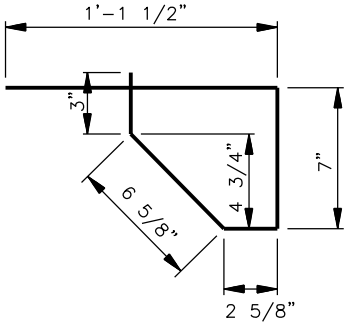

BAR H

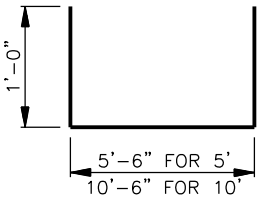

BAR D

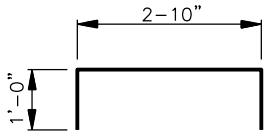

BAR N

7
7

Revision Date:			
Scale : N/A Date : 06/01/05	GARLAND ENGINEERING STANDARD DETAILS	INLET DETAILS 5' AND 10' STANDARD AND RECESSED	PAGE 7
Design :			
Drawn : GAV			
Dwg. File : REC_001.DWG			
Project No. : STANDARD-DETAILS			

REINFORCING BAR BID QUANTITIES

BAR	TYPE	SIZE	QTY	SPACING	LENGTH	WEIGHT (LBS)	TYPE	SIZE	QTY	SPACING	LENGTH	WEIGHT (LBS)
A	BT	4	22	12" MAX	5'-1 1/2 "	75	BT	4	22	12" MAX	5'-1 1/2 "	75
B	BT	4	16	12" MAX	4'-10"	52	BT	4	16	12" MAX	4'-10"	52
C	BT	4	19	10" MAX	5'-3"	67	BT	4	19	10" MAX	4'-9"	61
D	BT	4	4	12" MAX	17'-6"	15	BT	4	4	12" MAX	17'-6"	15
E	BT	5	30	6" MAX	3'-8"	115	BT	5	30	6" MAX	3'-8"	115
F	BT	4	10	12" MAX	17'-6"	117	BT	4	10	12" MAX	17'-6"	117
F1	STR	6	5	–	16'-10"	127	STR	6	5	–	16'-10"	127
G	STR	5	30	6" MAX	2'-10"	90	STR	5	30	6" MAX	2'-10"	90
H	BT	4	27	7" MAX	2'-8 3/4 "	49	BT	4	27	7" MAX	2'-8 3/4 "	49
J	STR	5	6	6" MAX	15'-6"	97	STR	5	6	6" MAX	15'-6"	97
L	BT	3	4	8" MAX	4'-6"	7	BT	3	4	8" MAX	4'-6"	7
** M	STR	7	1	–	48'-0"	98	STR	7	1	–	48'-0"	98
N	BT	4	8	12" MAX	4'-10"	26	BT	4	8	12" MAX	4'-10"	26
O	BT	4	4	–	3'-10"	11	BT	4	4	–	3'-10"	11
				TOTAL WEIGHT (LBS)		946				TOTAL WEIGHT (LBS)		940
	15' STANDARD INLET						15' RECESSED INLET					

** BARS M ARE #7 (STRAIGHT) CUT TO FIT IN FIELD.

NOTE:
LENGTH OF BARS J, G, AND E IN TABLES IS GIVEN FOR BID PURPOSES.
THESE BARS MAY BE CUT AS REQUIRED TO FIT AT MANHOLE.

NOTES (APPLY UNLESS OTHERWISE SHOWN OR NOTED):

1. CONCRETE SHALL BE CLASS "C".
2. ALL REINFORCING BARS SHALL BE ASTM A615 GR. 60.
3. LATERAL PIPE MAY ENTER INLET THROUGH ANY WALL.
4. CAST IRON FRAME & COVER SHALL BE BASS & HAYS #184L.
5. ALL CONSTRUCTION JOINTS (CJ) ARE PERMISSIBLE, NOT MANDATORY. CONSTRUCTION JOINTS MAY BE KEYED AT CONTRACTOR'S DISCRETION.
6. CHAMFER ALL EXPOSED EDGES AROUND INLET OPENINGS 3/4 ".
7. LOADING: (UNFACTORED LOADING)
   WHEEL LOAD HS20: 16 KIPS.
   LATERAL SOIL PRESSURE: 30 PSF/FT.
   LATERAL HYDROSTATIC PRESSURE = 64 PSF/FT.
   SURCHARGE LATERAL PRESSURE 2 FT = 60 PSF.
8. IF 20' INLET IS DESIRED, USE 2-10' INLETS WITH INTERIOR WALL AS SHOWN ON SECTIONS A-A & B-B IN THE 15' INLET STANDARD DRAWING.
9. 2000 PSI CLASS "B" CONCRETE - WARP TO SUIT CONDITIONS. TOP 1/2 " MORTAR FINISH TROWELLED TO A SMOOTH HARD FINISH.
10. REINFORCING DIMENSIONS ARE TO CENTER OF BAR UNLESS OTHERWISE NOTED.

1/7

Revision Date: 12/12

Scale : N/A Date : 06/01/05	GARLAND ENGINEERING STANDARD DETAILS	INLET DETAILS 15' STANDARD & 15' RECESSED	PAGE 8
Design :			
Drawn : GAV			
Dwg. File : REC_002.DWG			
Project No. : STANDARD-DETAILS			

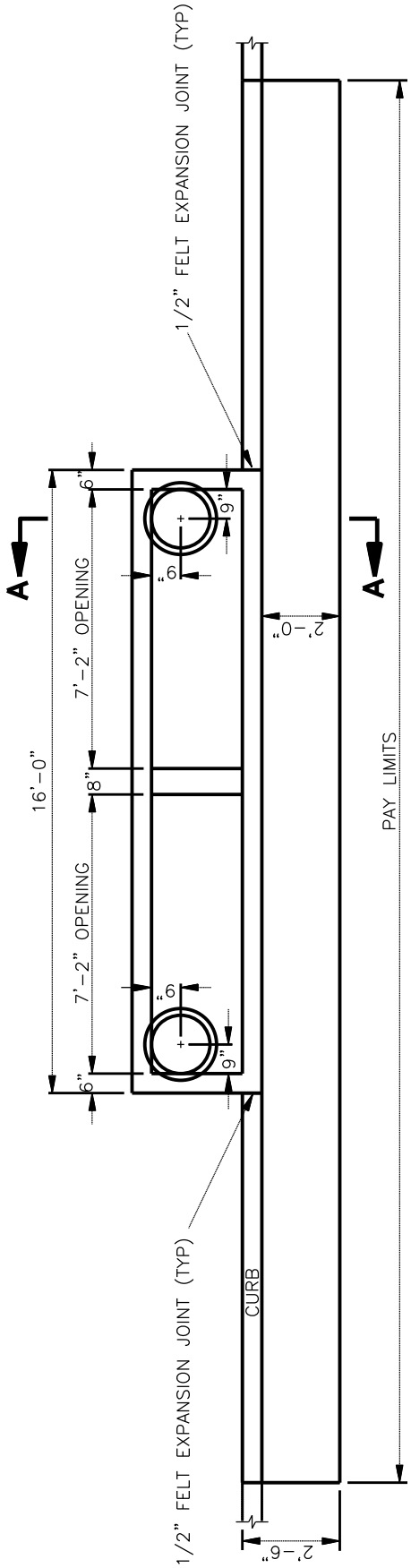

PLAN
STANDARD INLET

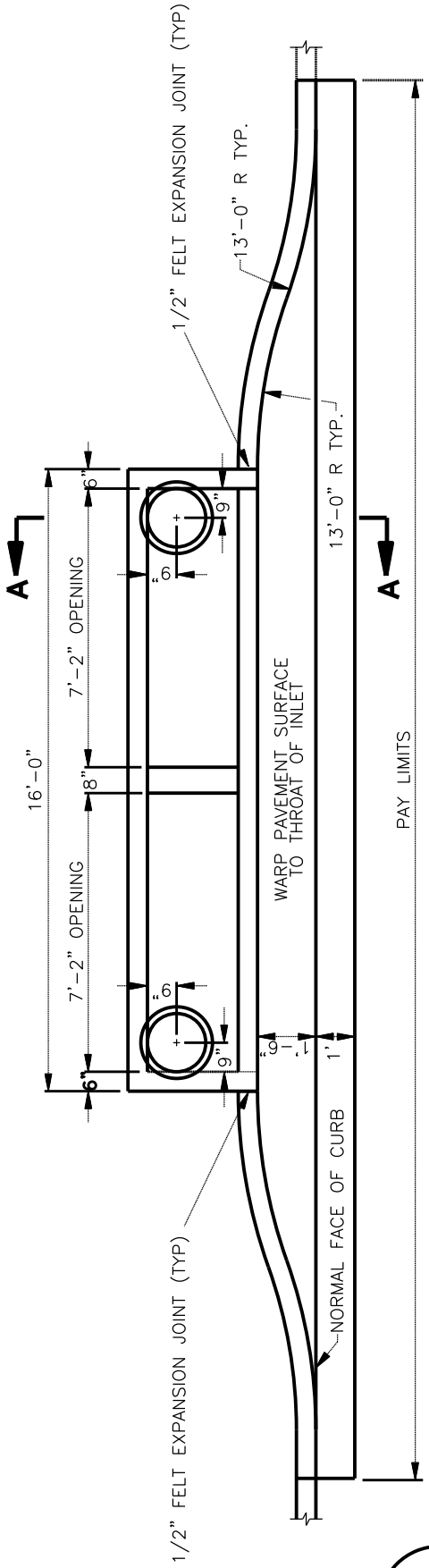

PLAN
RECESSED INLET

2/7

Revision Date: 01/06

Scale : N/A Date : 06/01/05	GARLAND ENGINEERING STANDARD DETAILS	INLET DETAILS 15' STANDARD & 15' RECESSED	PAGE 9
Design :			
Drawn : GAV			
Dwg. File : REC_002.DWG			
Project No. : STANDARD-DETAILS			

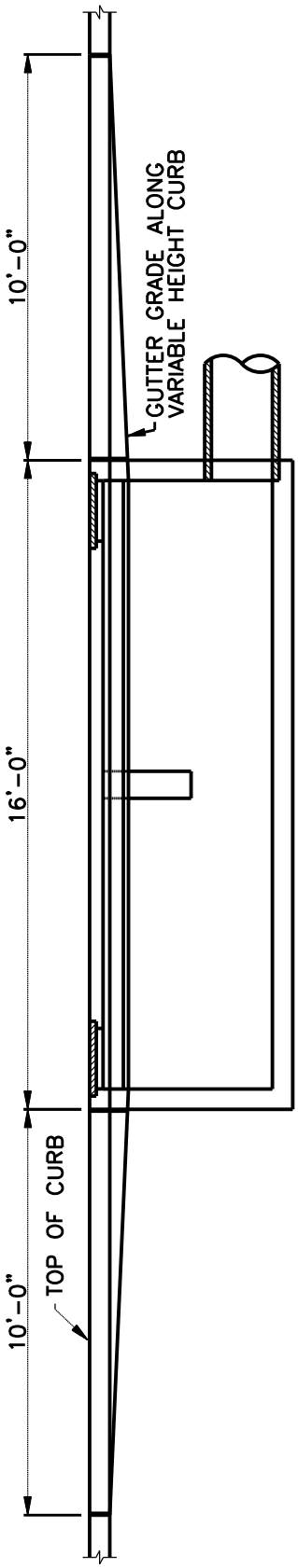

ELEVATION AT FACE OF CURB

3/7

Revision Date:

Scale : N/A Date : 06/01/05	GARLAND ENGINEERING	INLET DETAILS
Design :		15' STANDARD & 15' RECESSED
Drawn : GAV		
Dwg. File : REC_002.DWG		
Project No. : STANDARD-DETAILS	STANDARD DETAILS	

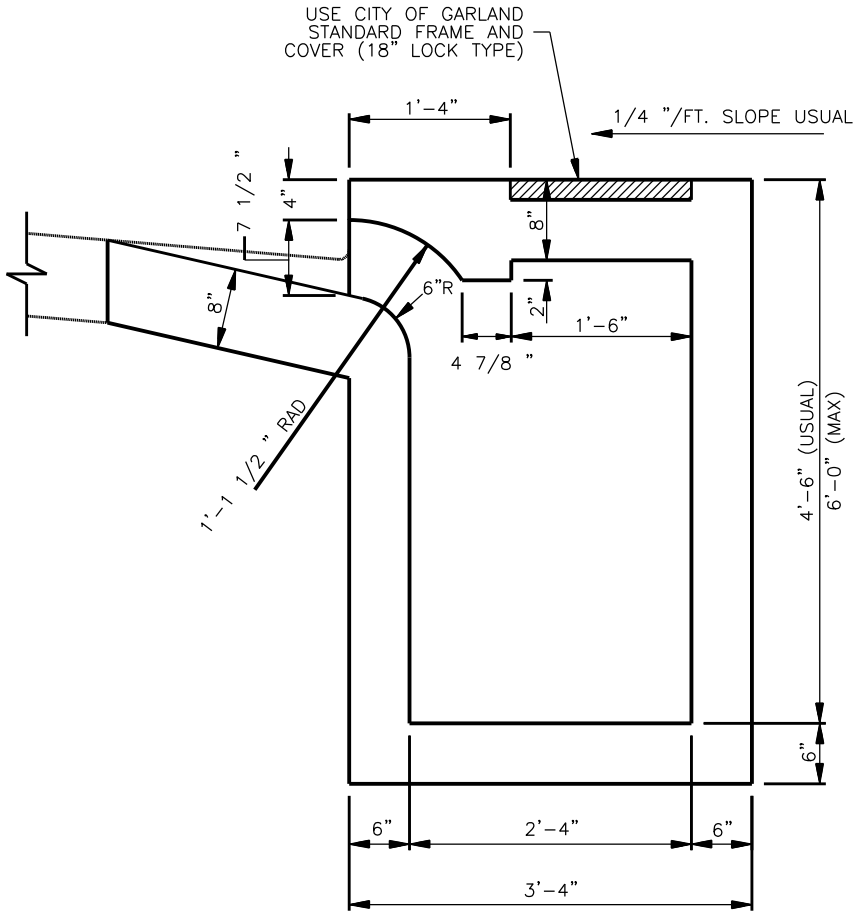

SECTION A-A

DIMENSIONAL SCHEMATIC

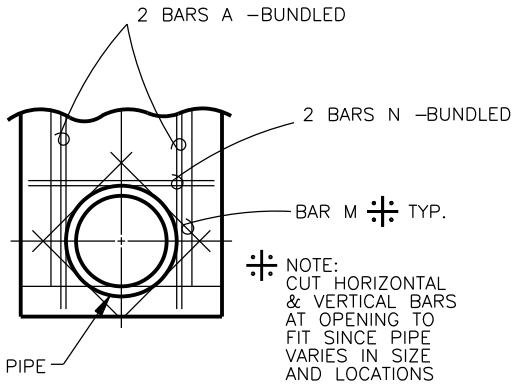

SECTION E-E

FRAMING AT OUTFLOW

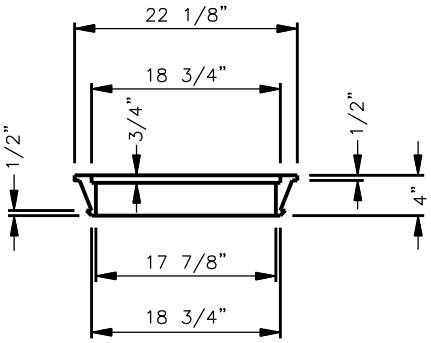

SECTION

INLET FRAME & COVER

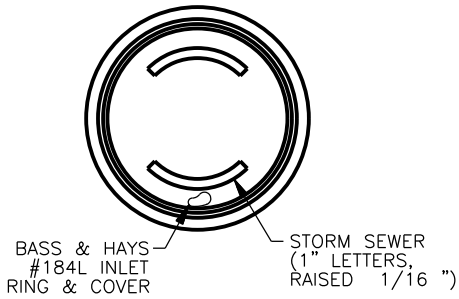

PLAN

4/7

Revision Date: 12/12

Scale : N/A Date : 06/01/05	GARLAND ENGINEERING STANDARD DETAILS	INLET DETAILS 15' STANDARD & 15' RECESSED	PAGE 11
Design :			
Drawn : GAV			
Dwg. File : REC_002.DWG			
Project No. : STANDARD-DETAILS			

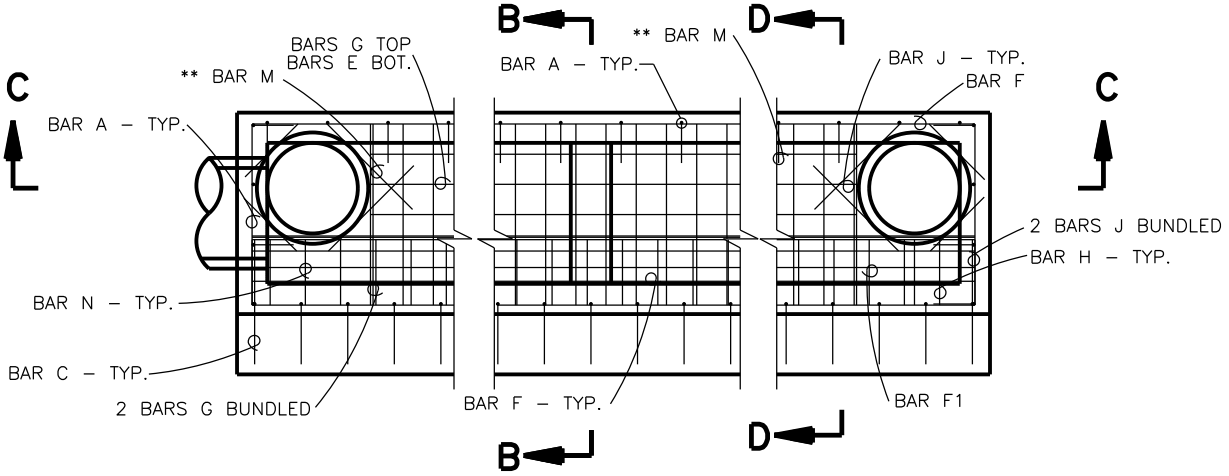

PLAN

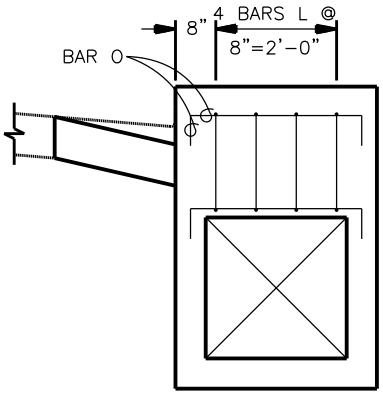

SECTION B-B

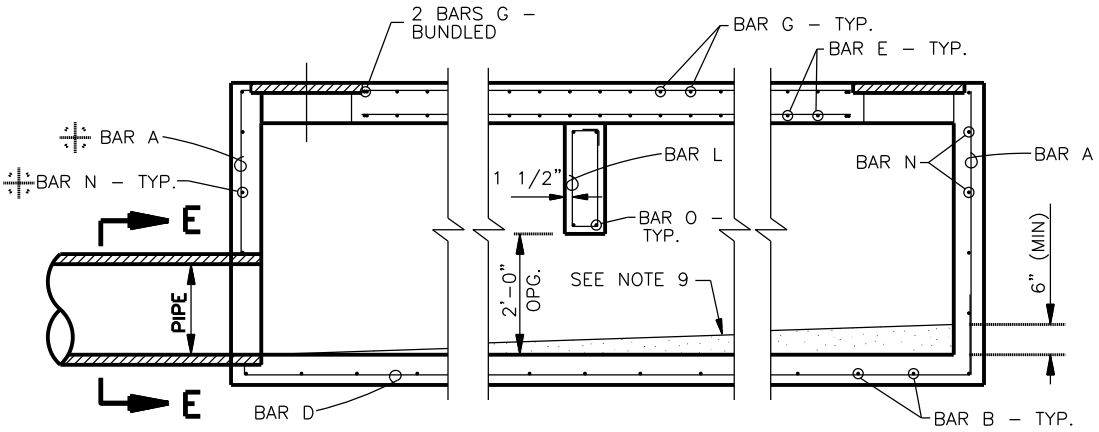

SECTION C-C

REINFORCING BAR LOCATIONS

5
7

Revision Date:

Scale : N/A Date : 06/01/05	GARLAND ENGINEERING STANDARD DETAILS	INLET DETAILS 15' STANDARD & 15' RECESSED	PAGE 12
Design :			
Drawn : GAV			
Dwg. File : REC_002.DWG			
Project No. : STANDARD-DETAILS			

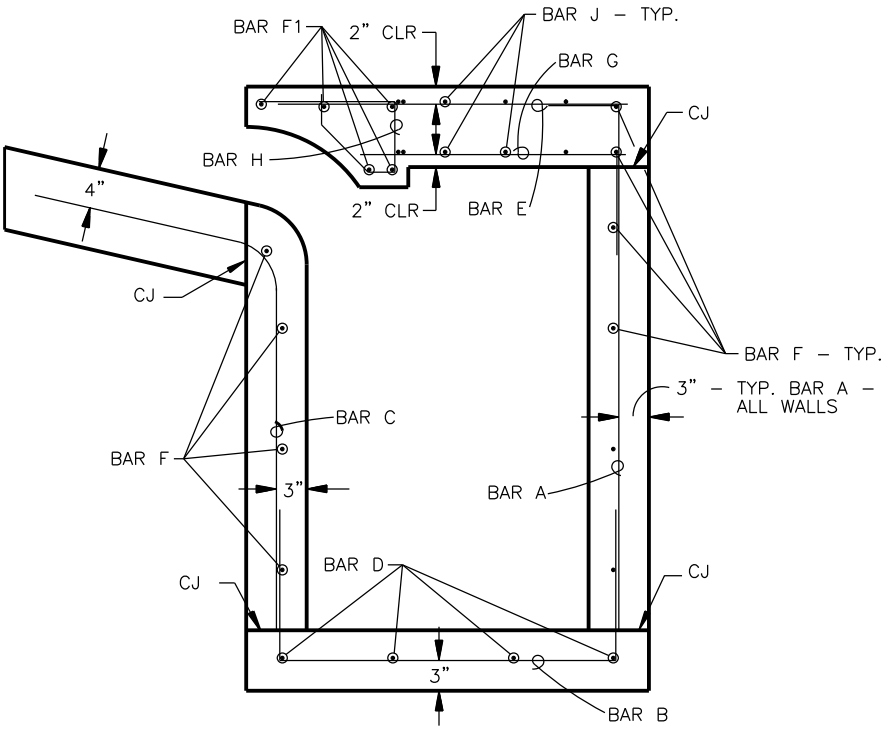

CJ = PERMISSIBLE CONSTRUCTION JOINT – SEE NOTE 5

SECTION D–D

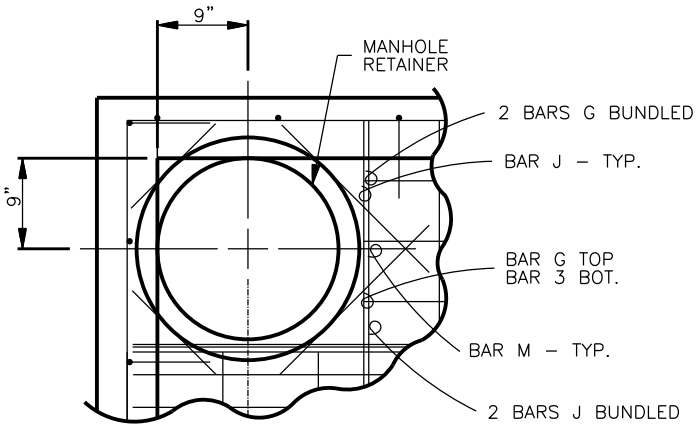

MANHOLE REINFORCING DETAIL

REINFORCING BAR LOCATIONS

6/7

Revision Date:

Scale : N/A Date : 06/01/05	GARLAND ENGINEERING STANDARD DETAILS	INLET DETAILS 15' STANDARD & 15' RECESSED	PAGE 13
Design :			
Drawn : GAV			
Dwg. File : REC_002.DWG			
Project No. : STANDARD–DETAILS			

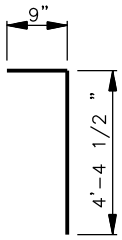

BAR A

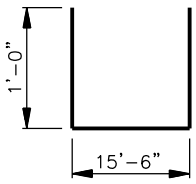

BAR D

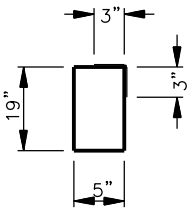

BAR L

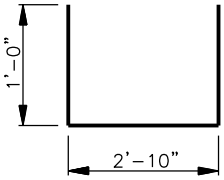

BAR B

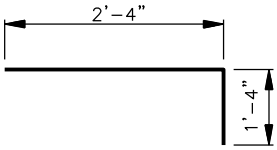

BAR E

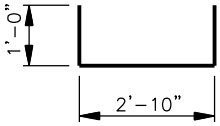

BAR N

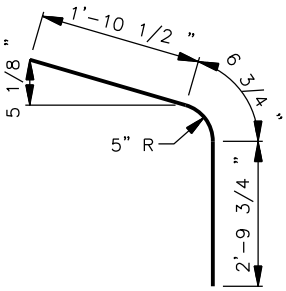

BAR C
(STANDARD INLET ONLY)

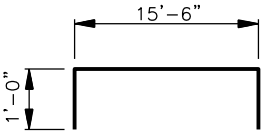

BAR F

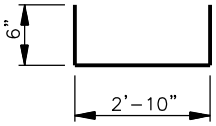

BAR O

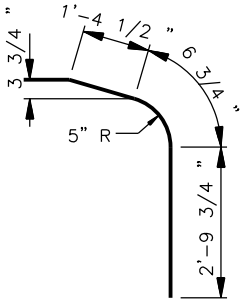

BAR C
(RECESSED INLET ONLY)

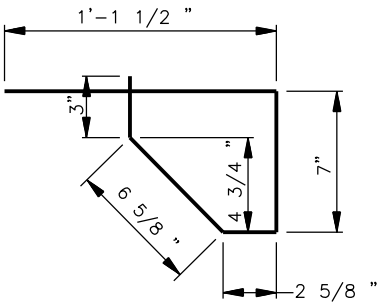

BAR H

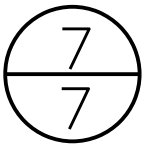

Revision Date:

Scale : N/A Date : 06/01/05	GARLAND ENGINEERING STANDARD DETAILS	INLET DETAILS 15' STANDARD & 15' RECESSED	PAGE 14
Design :			
Drawn : GAV			
Dwg. File : REC_002.DWG			
Project No. : STANDARD-DETAILS			