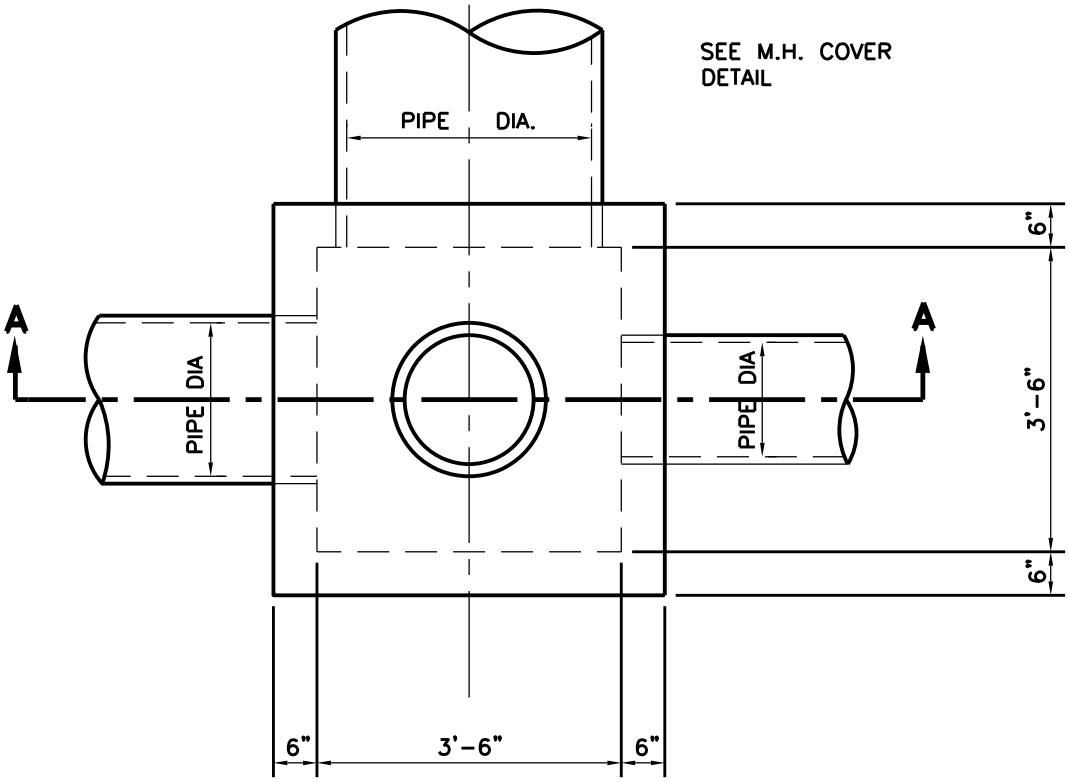


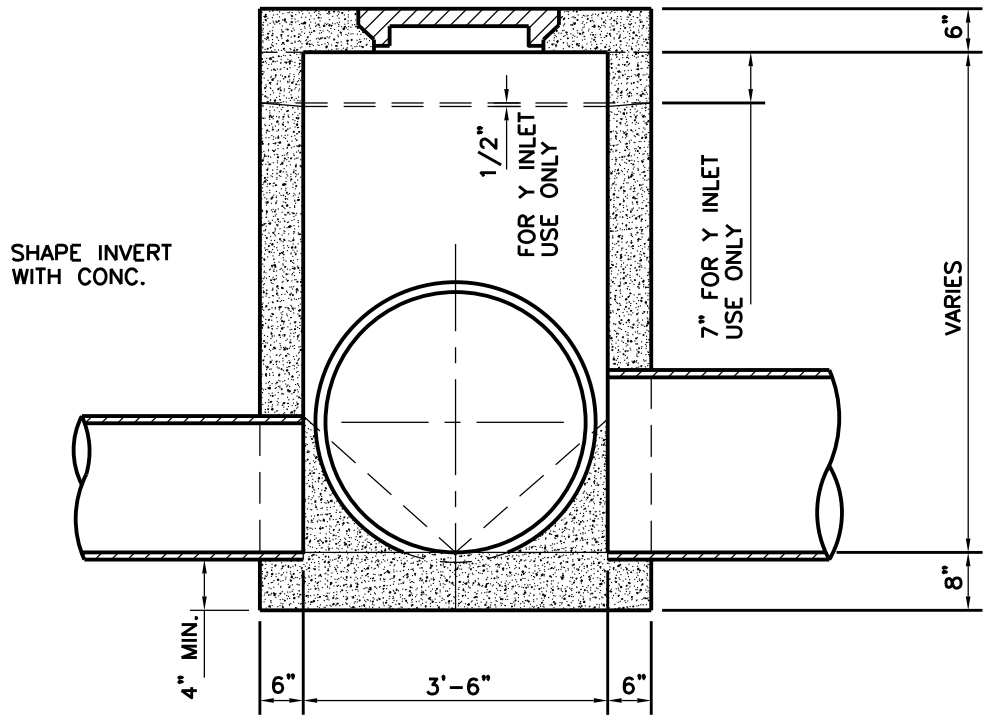


1/5

Revision Date:

| | | |
|---|---|---|
| Scale : N/A Date : 02/21/05 | GARLAND ENGINEERING STANDARD DETAILS | TYPE I JUNCTION BOX PLAN/SECTION |
| Design : COG | | |
| Drawn : COG | | |
| Dwg. File : JUN_001.DWG | | |
| Project No. : STANDARD-DETAILS | | |

PAGE 1

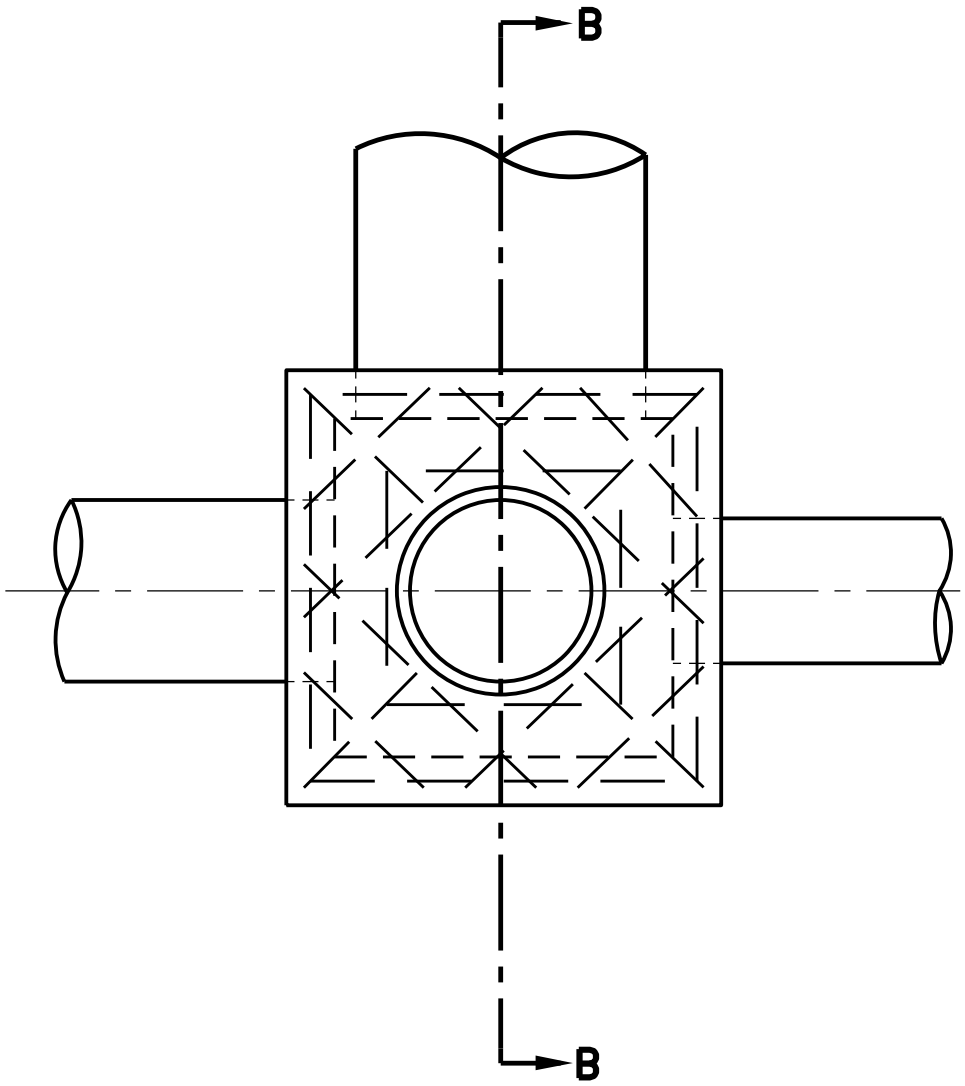


## STRUCTURAL PLAN

2
5

Revision Date:

| | | | |
|---|---|---|---|
| Scale : N/A Date : 02/21/05 | GARLAND ENGINEERING STANDARD DETAILS | TYPE I JUNCTION BOX STRUCTURAL PLAN | PAGE 2 |
| Design : COG | | | |
| Drawn : COG | | | |
| Dwg. File : JUN_001.DWG | | | |
| Project No. : STANDARD-DETAILS | | | |

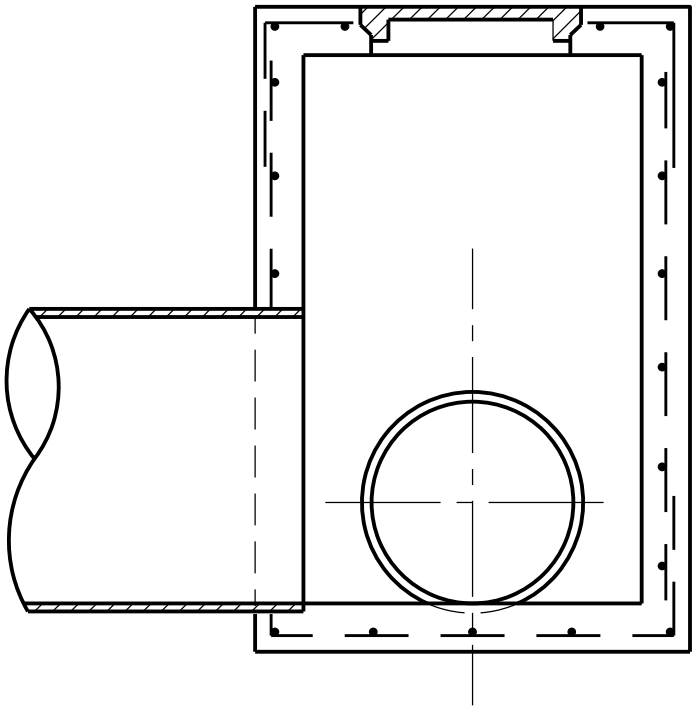

## SECTION B–B

3
5

Revision Date:

| | | | |
|---|---|---|---|
| Scale : N/A Date : 02/21/05 | GARLAND ENGINEERING STANDARD DETAILS | TYPE I JUNCTION BOX SECTIONS | PAGE 3 |
| Design : COG | | | |
| Drawn : COG | | | |
| Dwg. File : JUN_001.DWG | | | |
| Project No. : STANDARD–DETAILS | | | |

# TYPE I REINF. TABLE

| ITEM | | SIZE | QUANTITY | LENGTH | REMARKS |
|---|---|---|---|---|---|
| BARS | A | NO. 5 | 4 | | 24" 18" |
| | B | NO. 4 | VARIES | 4'-2" | |
| | C | NO. 3 | 4 | 2'-0" | |
| | D | NO. 3 | 4 | 3'-4" | |
| | E | NO. 3 | 4 | 2'-4" | |
| | F | NO. 3 | 16 | VARIES | |
| | G | NO. 3 | 10 | | 18" 3'-4" 18" |

4
5

Revision Date:

| | | | |
|---|---|---|---|
| Scale : N/A Date : 02/21/05 | GARLAND ENGINEERING STANDARD DETAILS | TYPE I JUNCTION BOX REBAR CHART | PAGE 4 |
| Design : COG | | | |
| Drawn : COG | | | |
| Dwg. File : JUN_001.DWG | | | |
| Project No. : STANDARD-DETAILS | | | |

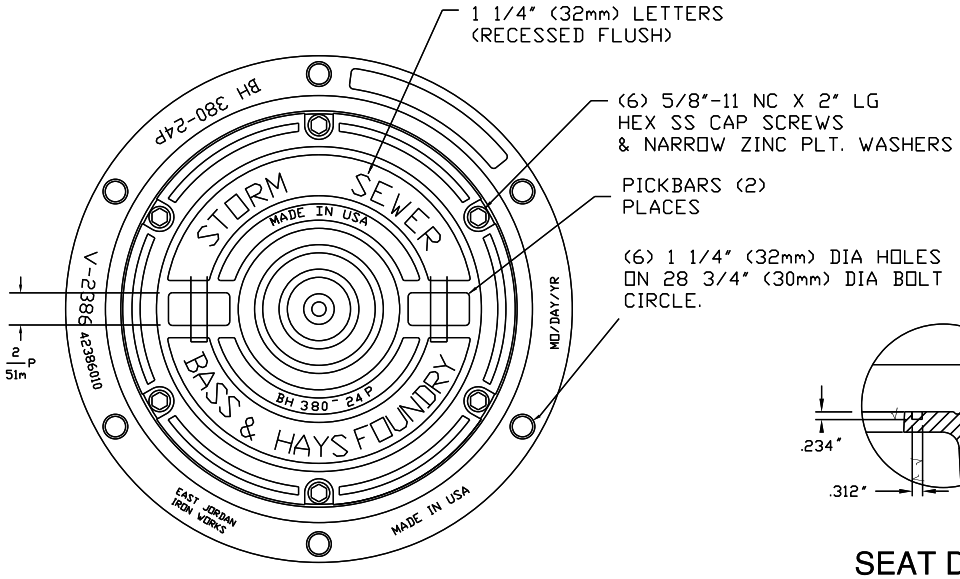


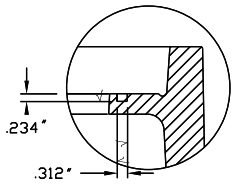


SEAT DETAIL

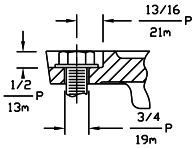


BOLT HOLE SECTION

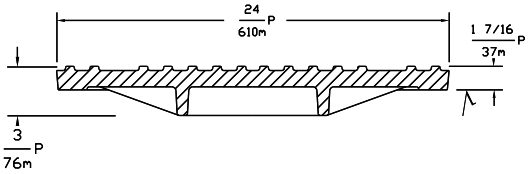


COVER SECTION

√ MACHINED SURFACE

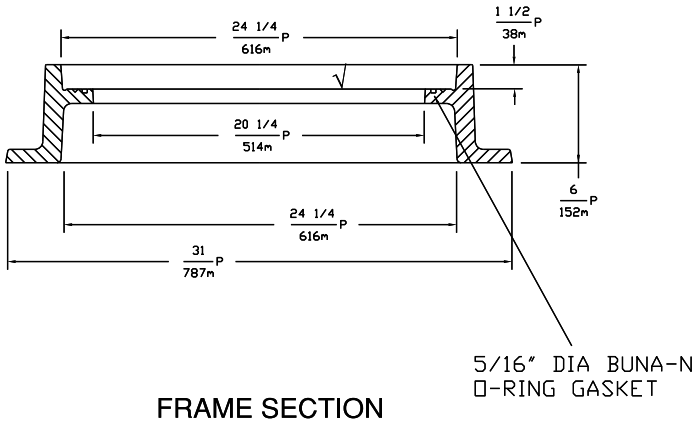


FRAME SECTION

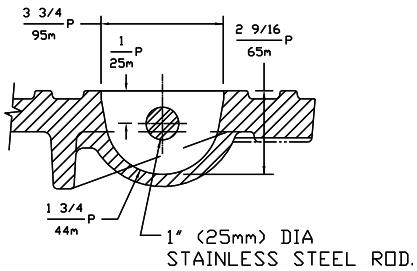


PICKBAR DETAIL

| 380-24 P | |
|---|---|
| COVER: | 160 LBS 73kg |
| FRAME: | 210 LBS 95kg |
| ASSY : | 370 LBS 168kg |

5/5

| | | | |
|---|---|---|---|
| Scale : N/A Date : 10/04 | GARLAND ENGINEERING STANDARD DETAILS | TYPE I JUNCTION BOX FRAME AND COVER | PAGE 5 |
| Design : COG | | | |
| Drawn : COG | | | |
| Dwg. File : DETAIL_SHEET_8.DWG | | | |
| Project No. : STANDARD-DETAILS | | | |

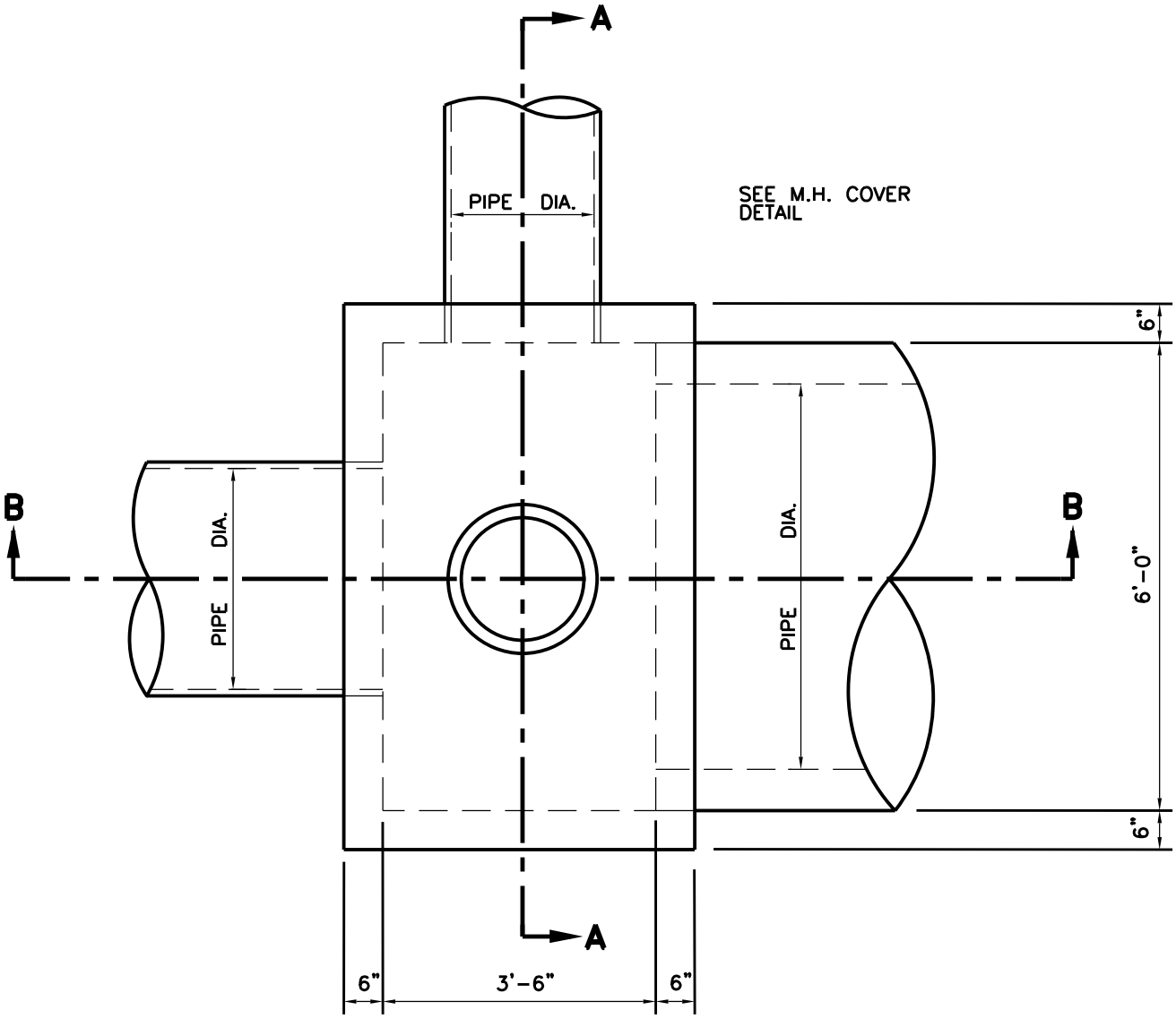


## PLAN

1/5

Revision Date:

| | | |
|---|---|---|
| Scale : N/A Date : 02/21/05 | GARLAND ENGINEERING STANDARD DETAILS | TYPE II JUNCTION BOX PLAN |
| Design : COG | | |
| Drawn : COG | | |
| Dwg. File : JUN_001.DWG | | |
| Project No. : STANDARD-DETAILS | | |

PAGE 6

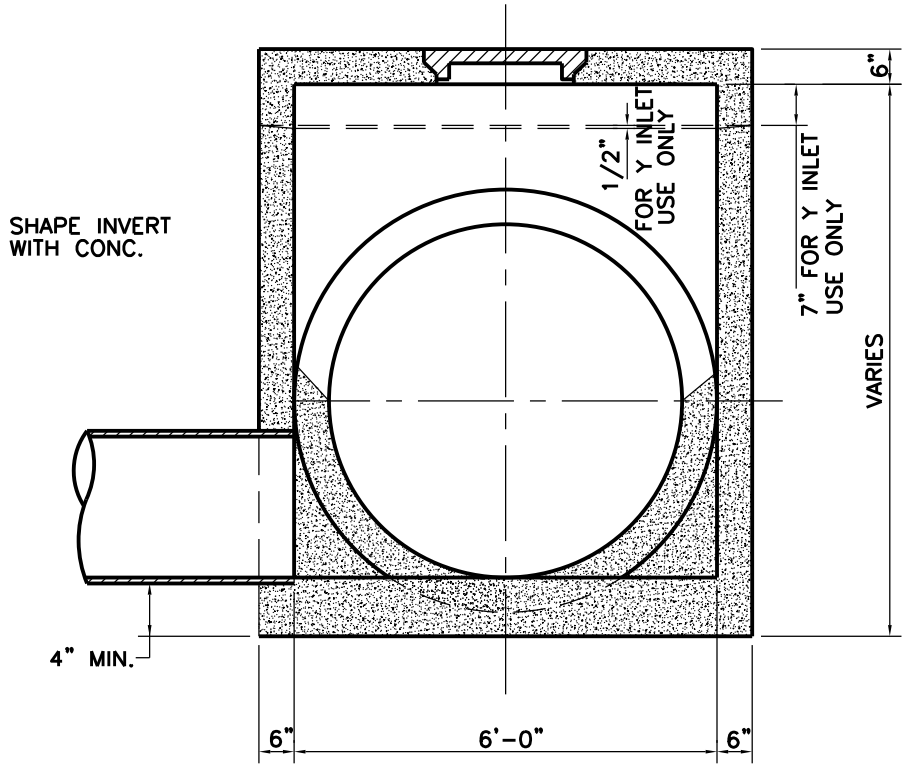


## SECTION A-A

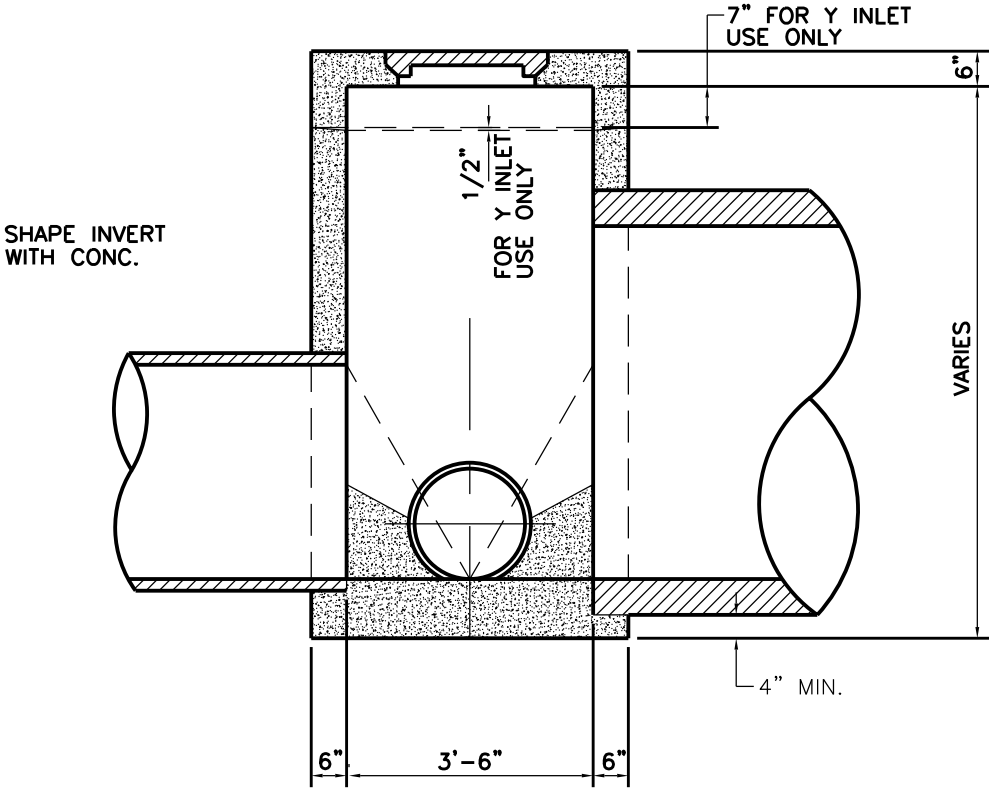


## SECTION B-B

2
5

Revision Date:

| | | |
|---|---|---|
| Scale : N/A Date : 02/21/05 | GARLAND ENGINEERING STANDARD DETAILS | TYPE II JUNCTION BOX SECTIONS A-A & B-B |
| Design : COG | | |
| Drawn : COG | | |
| Dwg. File : JUN_001.DWG | | |
| Project No. : STANDARD-DETAILS | | |

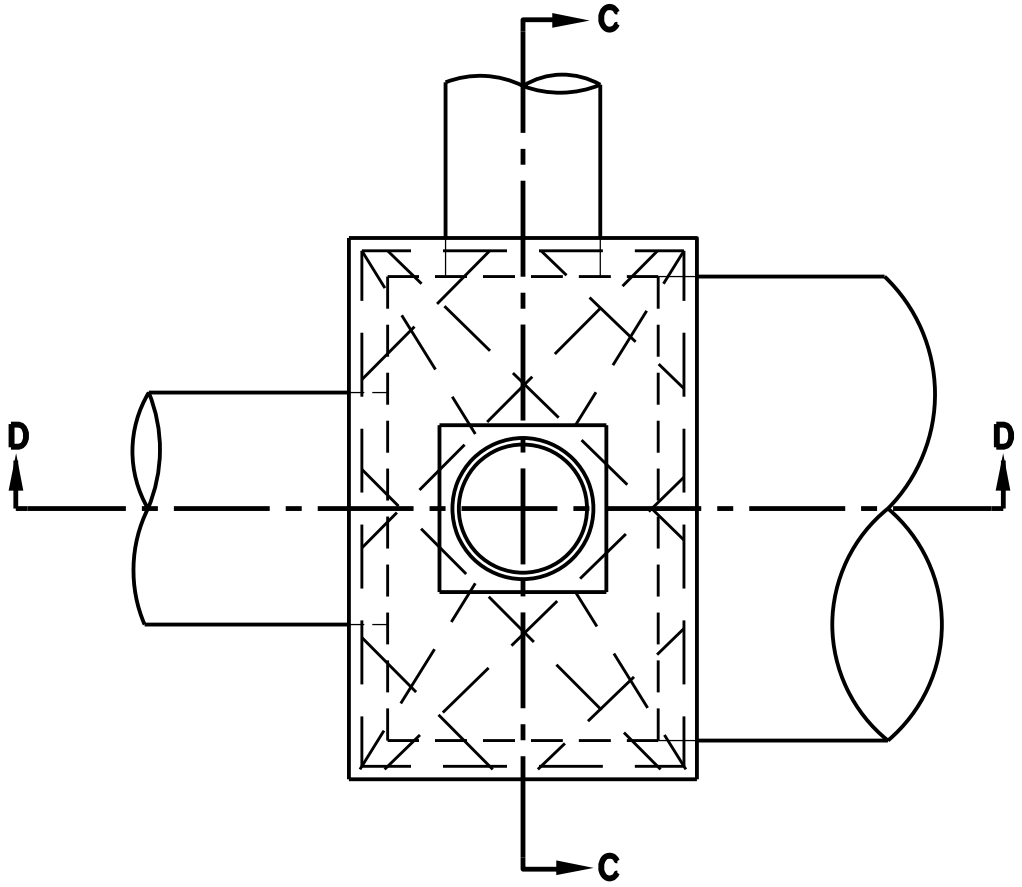


## STRUCTURAL PLAN

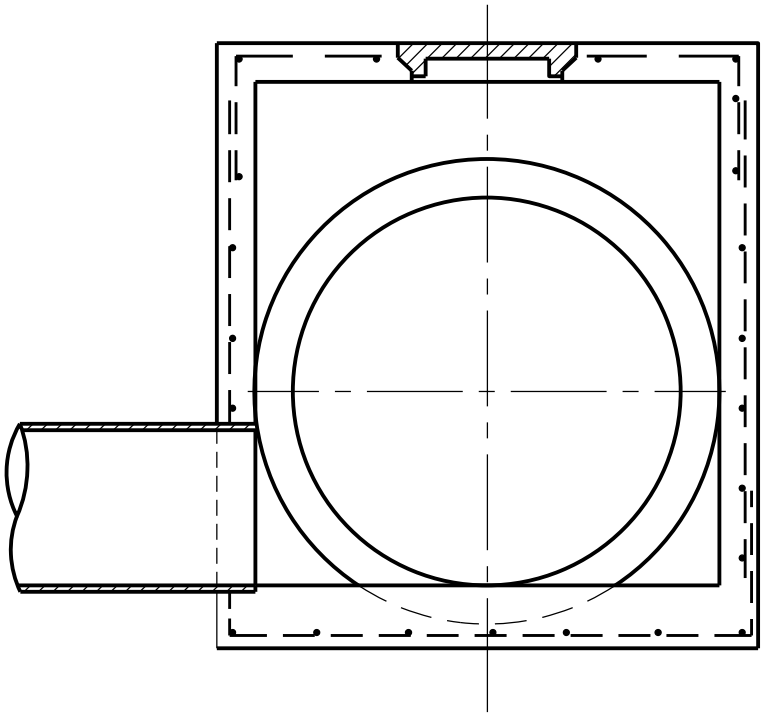

## SECTION C–C

3
5

| | | | |
|---|---|---|---|
| Scale : N/A Date : 02/21/05 | GARLAND ENGINEERING STANDARD DETAILS | TYPE II JUNCTION BOX STRUCTURAL PLAN/SECTION | PAGE 8 |
| Design : COG | | | |
| Drawn : COG | | | |
| Dwg. File : JUN_001.DWG | | | |
| Project No. : STANDARD–DETAILS | | | |

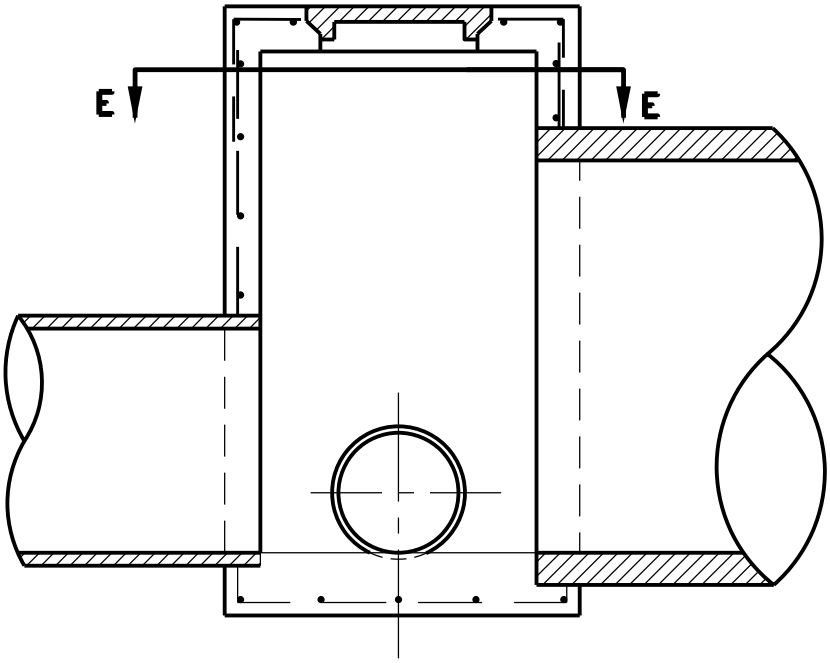


## SECTION D–D

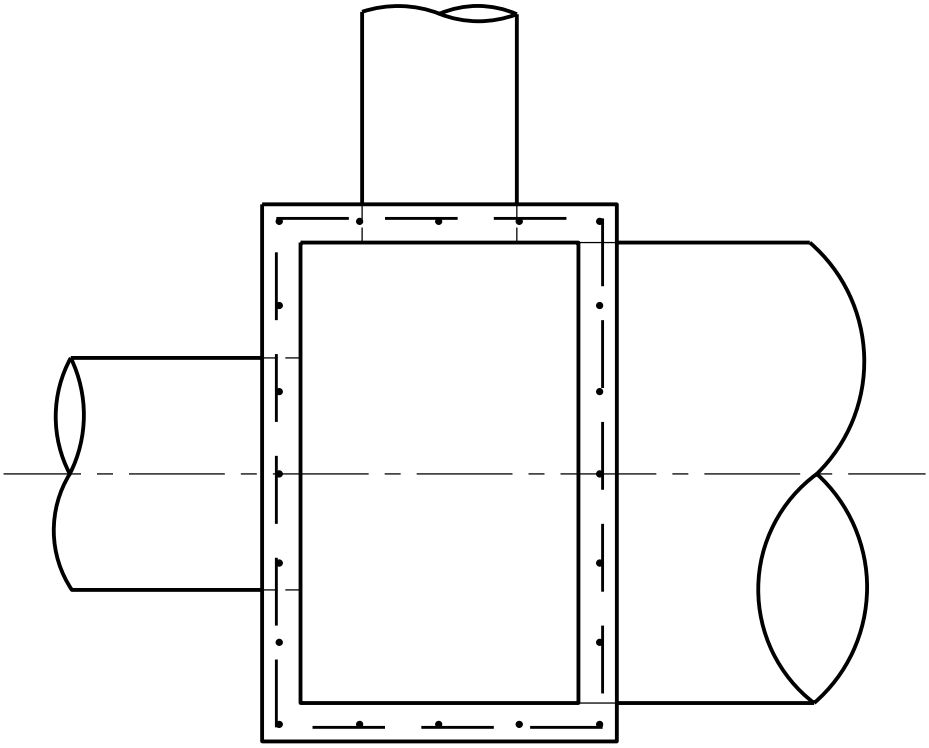

## SECTION E–E

4/5

| | | | |
|---|---|---|---|
| Scale : N/A Date : 02/21/05 | GARLAND ENGINEERING STANDARD DETAILS | TYPE II JUNCTION BOX SECTIONS D–D & E–E | PAGE 9 |
| Design : COG | | | |
| Drawn : COG | | | |
| Dwg. File : JUN_001.DWG | | | |
| Project No. : STANDARD–DETAILS | | | |

# TYPE II REINF. TABLE

| ITEM | | SIZE | QUANTITY | LENGTH | REMARKS |
|---|---|---|---|---|---|
| BARS | A | NO. 4 | VARIES | 4'-2" | |
| | B | NO. 3 | 2 | 8'-8" | |
| | C | NO. 5 | 4 | | 2'-10" 18" |
| | D | NO. 3 | 4 | 2'-6" | |
| | E | NO. 3 | 2 | 8'-8" | |
| | F | NO. 3 | 4 | 2'-4" | |
| | G | NO. 4 | VARIES | 6'-8" | |
| | H | NO. 3 | 20 | VARIES | |
| | J | NO. 3 | 5 | | 18" 6'-8" 18" |
| | K | NO. 3 | 7 | | 18" 4'-2" 18" |

5
5

| | | |
|---|---|---|
| Scale : N/A Date : 02/21/05 | GARLAND ENGINEERING | TYPE II JUNCTION BOX REBAR CHART |
| Design : COG | | |
| Drawn : COG | | |
| Dwg. File : JUN_001.DWG | | |
| Project No. : STANDARD-DETAILS | STANDARD DETAILS | |