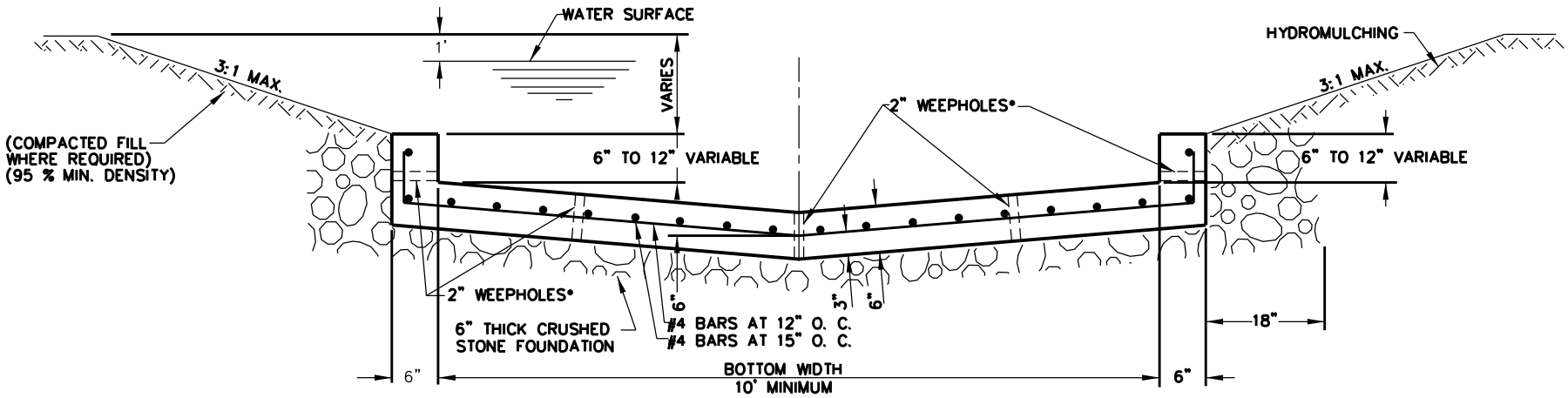

PILOT CHANNEL LINING SECTION

NOTES:

1. WEEP HOLES SHALL BE SPACED 15' O.C. OR AS REQUIRED BY CITY.
2. CHANNEL LINING SHALL BE CLASS "C" CONCRETE.

1/3

Revision Date:

Scale : N/A Date :06/01/05
Design :
Drawn : JMK
Dwg. File : LIN_001.DWG
Project No. : STANDARD-DETAILS

GARLAND ENGINEERING

STANDARD DETAILS

PILOT CHANNEL LINING

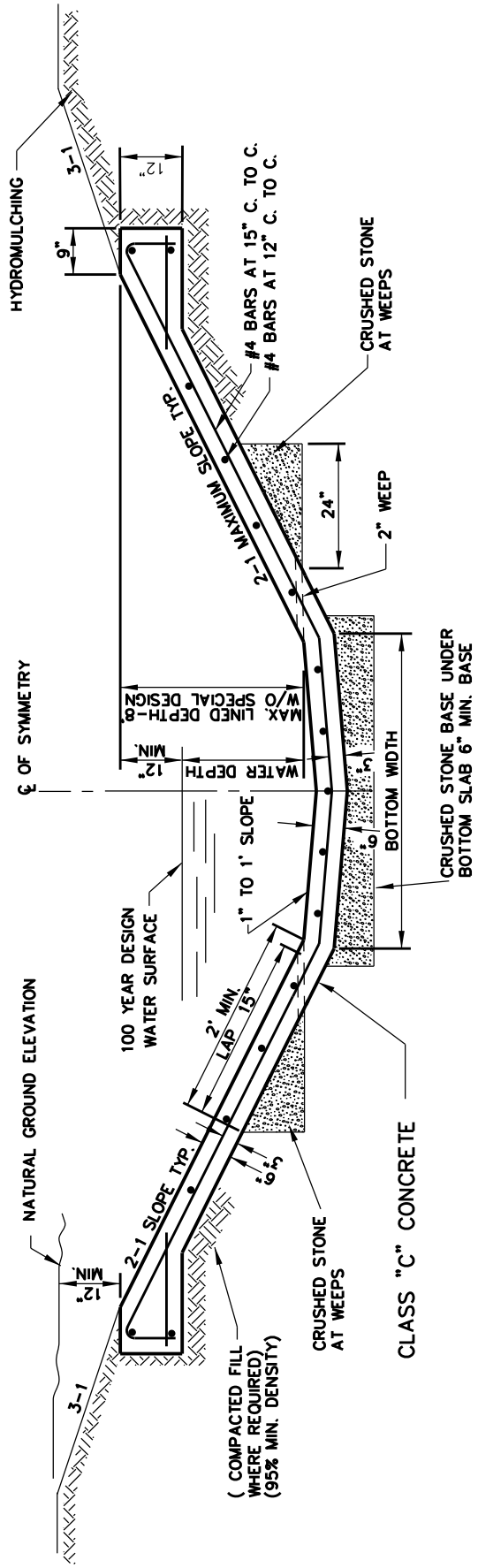

NORMAL CHANNEL SECTION

2/3

Revision Date: 06/08			
Scale : N/A Date : 06/01/05	GARLAND ENGINEERING STANDARD DETAILS	SLOPED LINED CHANNEL	PAGE 2
Design :			
Drawn : JMK			
Dwg. File : LIN_001.DWG			
Project No. : STANDARD-DETAILS			

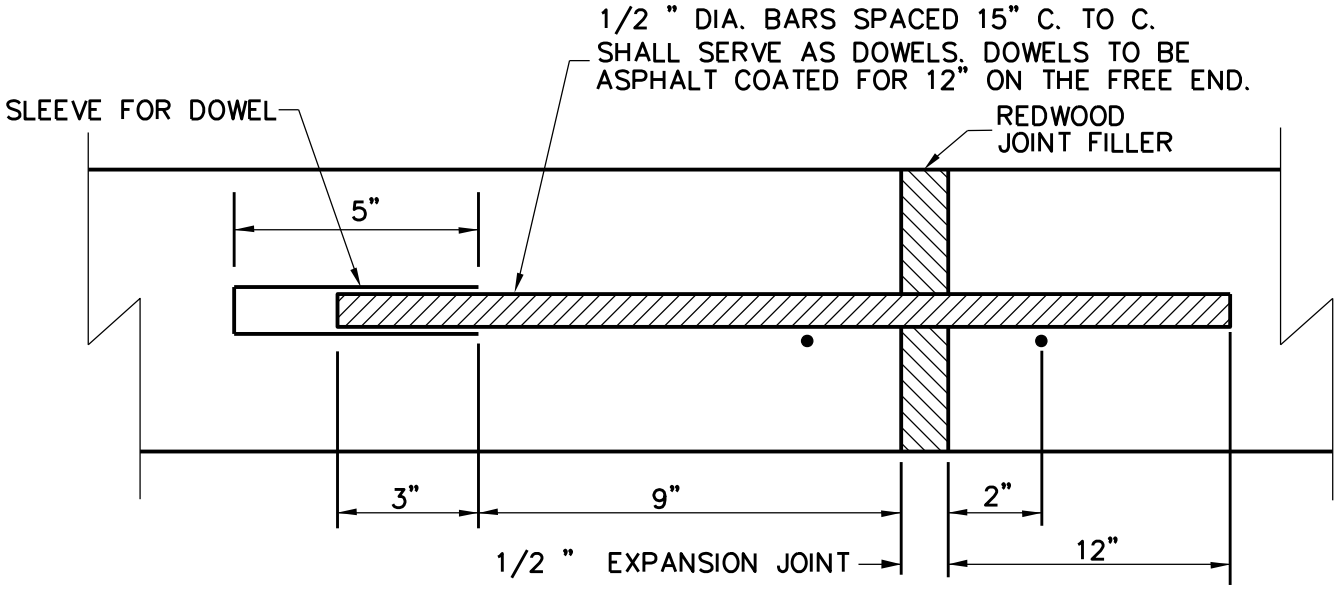

TRANSVERSE EXPANSION JOINT

GENERAL NOTES

LINED CHANNEL NOTES:

1. ALL CONSTRUCTION SHALL BE IN CONFORMITY WITH CURRENT CITY OF GARLAND GENERAL SPECIFICATIONS.
2. CONSTRUCTION JOINT SHOWN FOR CONVENIENCE ONLY – MONOLITHIC CONSTRUCTION MAY BE USED
3. ALL REINFORCING STEEL SPACING AS SHOWN.
4. CONCRETE SHALL BE CLASS "C".
5. SIDE SLOPES SHALL BE NO STEEPER THAN 3:1.
6. WHEN SOLID ROCK IS ENCOUNTERED BY NORMAL CHANNEL SECTION, REMOVE 6" DEPTH OF SOLID ROCK AND REPLACE WITH 6" DEPTH OF CRUSHED ROCK FOUNDATION BELOW PROPOSED CHANNEL STRUCTURE.
7. CONCRETE LINED CHANNELS TO BE USED ONLY AS APPROVED BY CITY.
8. FOR SLOPES 3:1 OR GREATER, GABION BASKETS, INTERLOCKING PAVERS, "R-RAP" CEMENT BAGS OR OTHER APPROVED CHANNEL LINERS SHALL BE USED AS APPROVED BY CITY.
9. ALL APPLICABLE FEMA AND CORPS OF ENGINEER PERMITS SHALL BE OBTAINED PRIOR TO CITY ISSUE OF PERMIT.
10. ALL WEEP HOLES SHALL HAVE GRAVEL TRENCHES 18" DEEP AND 12" WIDE WRAPPED IN FILTER FABRIC BY GEOTEX 351 OR ADS 4000 OR AN APPROVED EQUAL NON-WOVEN GEOTEXTILE.
11. JOINTS SHALL BE PLACED EVERY 100' OR AT THE END OF A POUR.

3/3

Revision Date:			
Scale : N/A Date : 06/01/05	GARLAND ENGINEERING STANDARD DETAILS	LINED CHANNEL JOINT DETAIL AND GENERAL NOTES	PAGE 3
Design :			
Drawn : JMK			
Dwg. File : LIN_001.DWG			
Project No. : STANDARD-DETAILS			