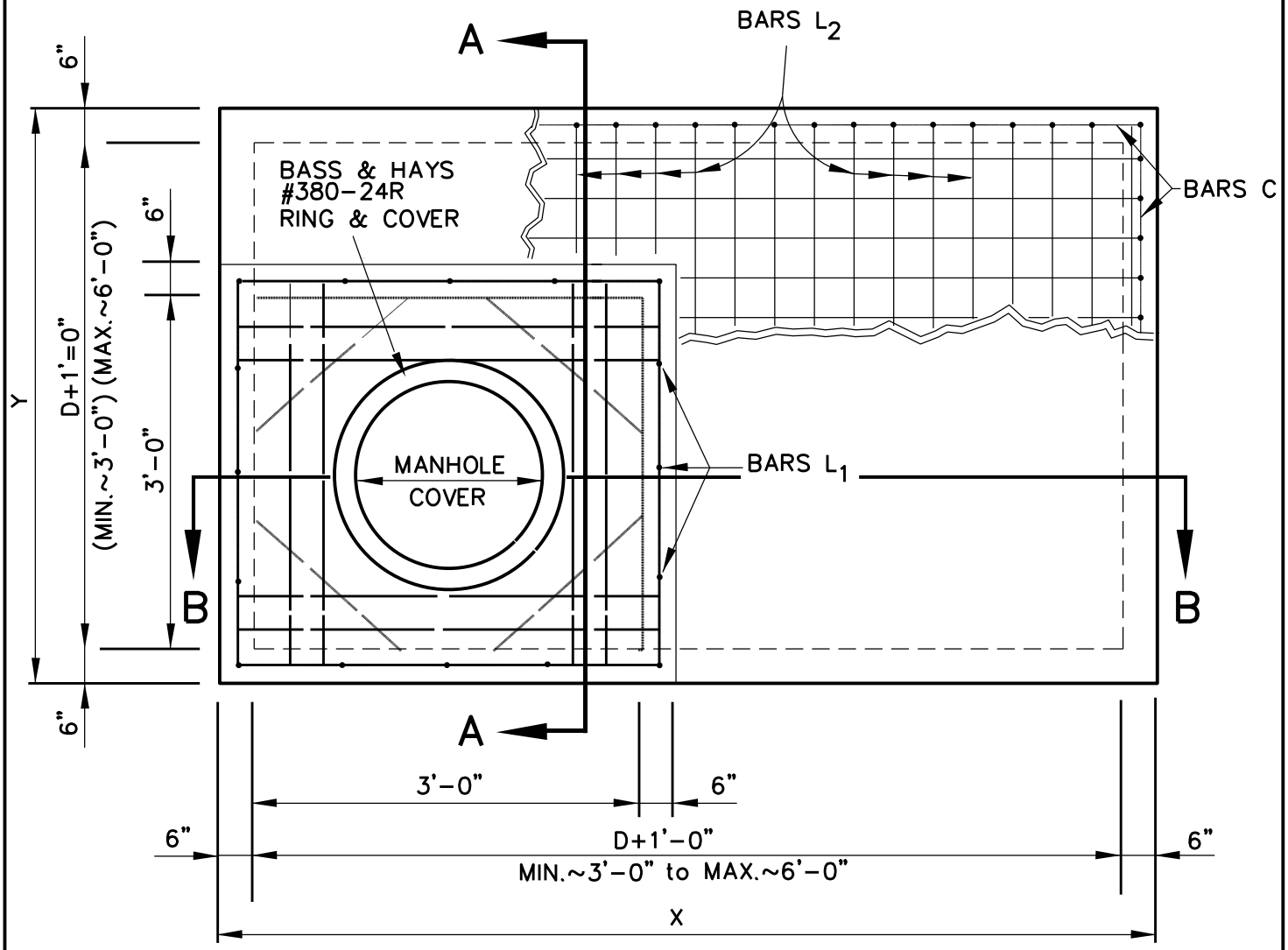

PLAN

1/6

Revision Date:			
Scale : N/A Date : 06/01/05	GARLAND ENGINEERING STANDARD DETAILS	STORM SEWER MANHOLE WITH CAST-IN-PLACE RISER	PAGE 1
Design :			
Drawn : GAV			
Dwg. File : SMH_001.DWG			
Project No. : STANDARD-DETAILS			

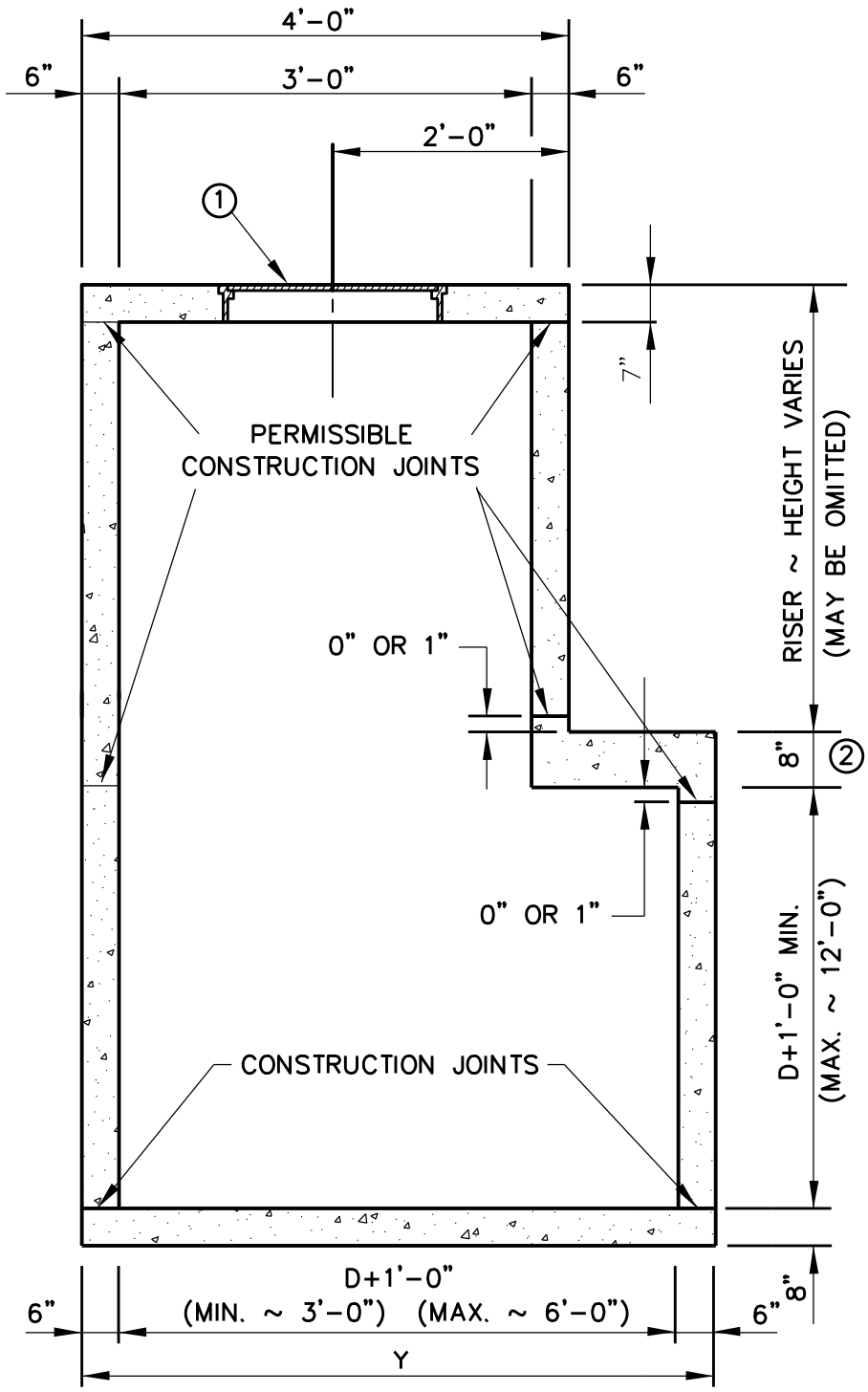

SECTION A-A

1. SEE RING & COVER DETAILS ON SHEET 6 OF 6
2. FOR 0'-15' OF FILL

2/6

Revision Date:

Scale : N/A Date : 06/01/05	GARLAND ENGINEERING STANDARD DETAILS	STORM SEWER MANHOLE WITH CAST-IN-PLACE RISER
Design :		
Drawn : GAV		
Dwg. File : SMH_001.DWG		
Project No. : STANDARD-DETAILS		

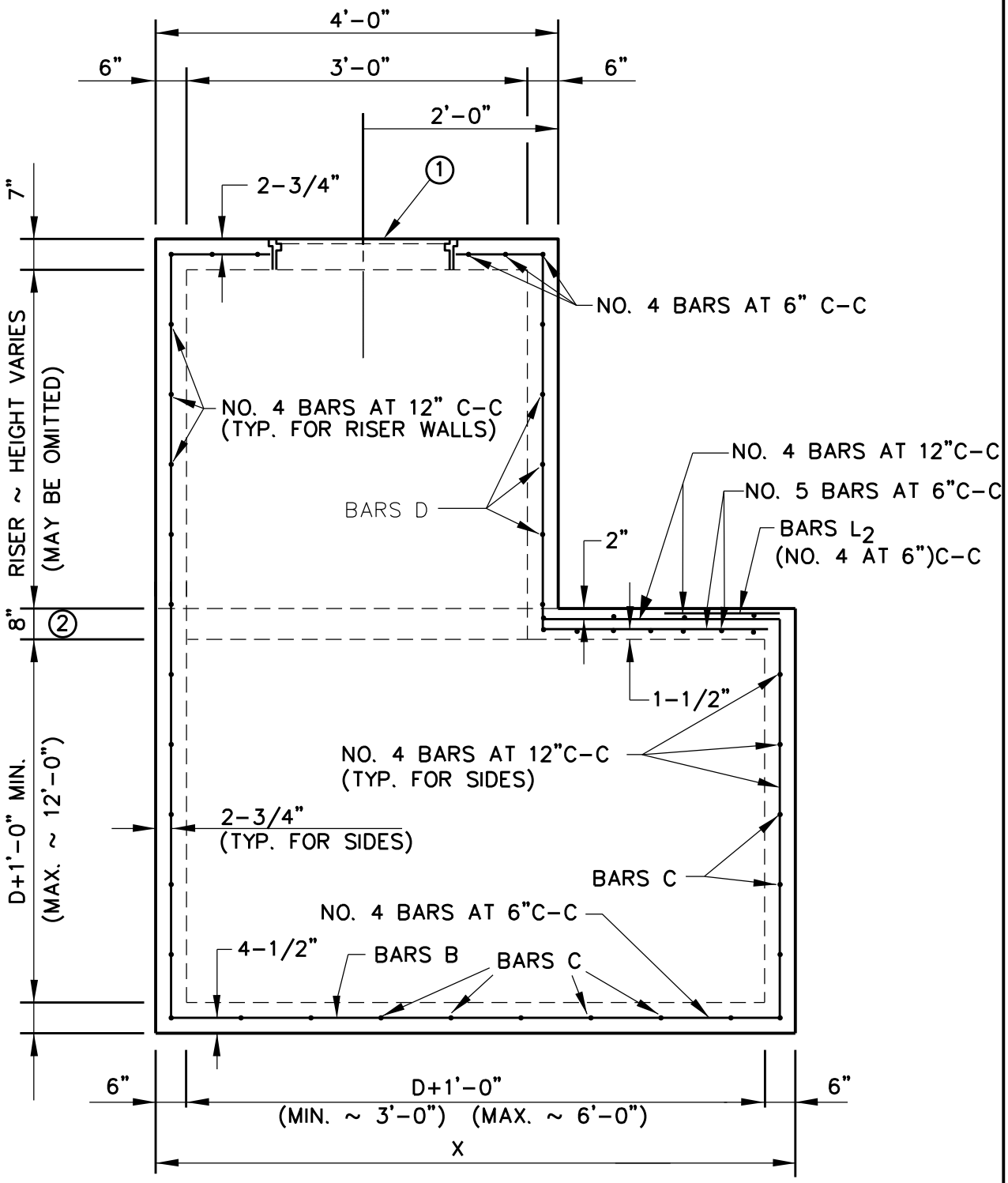

SECTION B-B

1. SEE RING & COVER DETAILS ON SHEET 5 OF 6
2. FOR 0'-15' OF FILL

D = MAXIMUM INSIDE DIAMETER OF ANY PIPE ENTERING THE SIDE SHOWN OR THE OPPOSITE SIDE

3/6

Revision Date:			
Scale : N/A Date :06/01/05	GARLAND ENGINEERING STANDARD DETAILS	STORM SEWER MANHOLE WITH CAST-IN-PLACE RISER	PAGE 3
Design :			
Drawn : GAV			
Dwg. File : SMH_001.DWG			
Project No. : STANDARD-DETAILS			

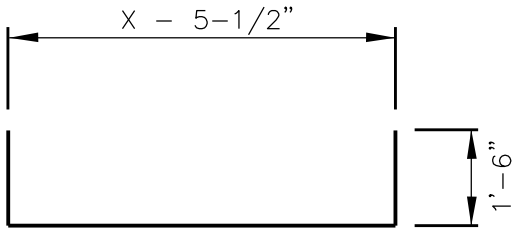

BARS B

BARS L1

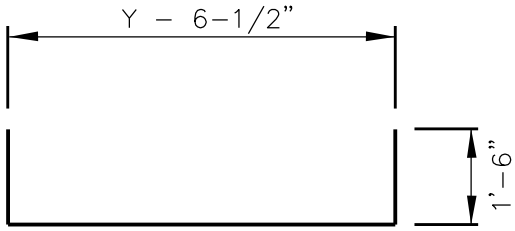

BARS C

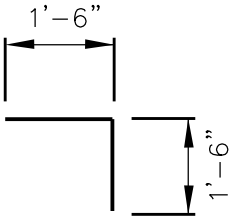

BARS L2

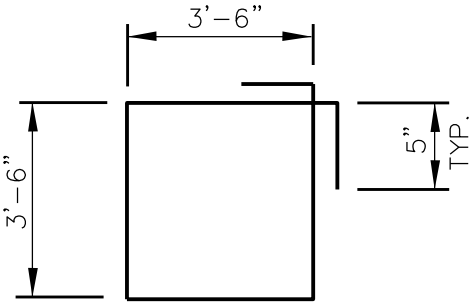

BARS D

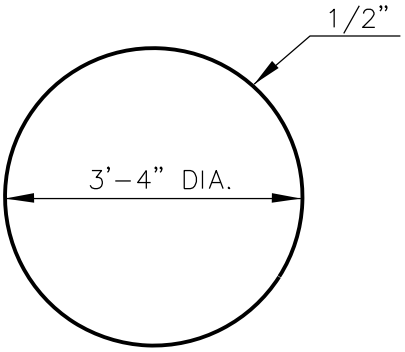

CONCENTRIC BARS

4
6

Revision Date:			
Scale : N/A Date :06/01/05	GARLAND ENGINEERING STANDARD DETAILS	STORM SEWER MANHOLE WITH CAST–IN–PLACE RISER (STEEL DETAILS)	PAGE 4
Design :			
Drawn : GAV			
Dwg. File : SMH_001.DWG			
Project No. : STANDARD–DETAILS			

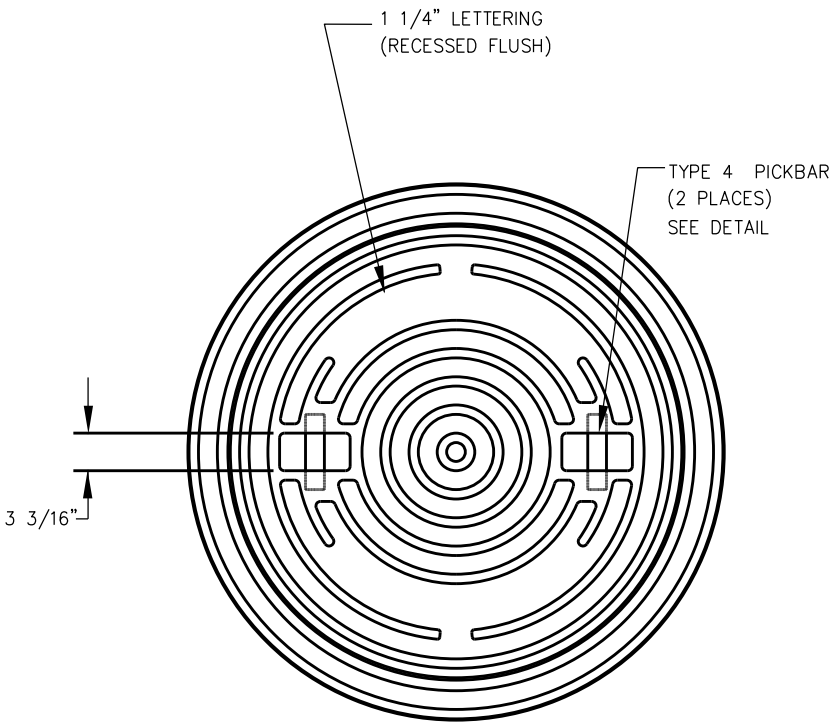

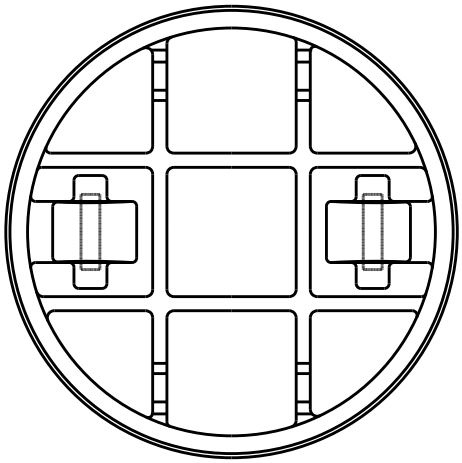

BOTTOM VIEW

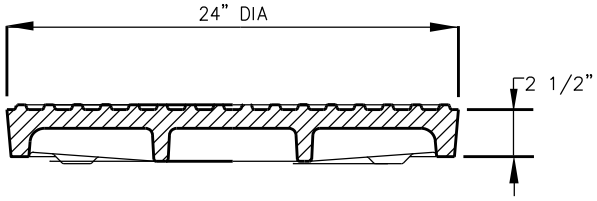

SECTION

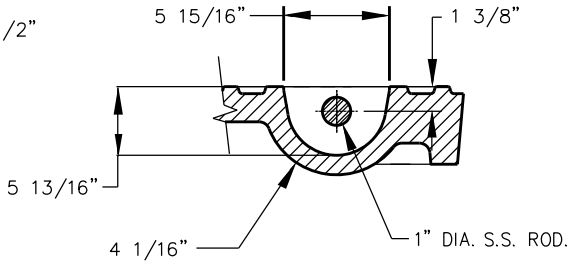

PICKBAR DETAIL

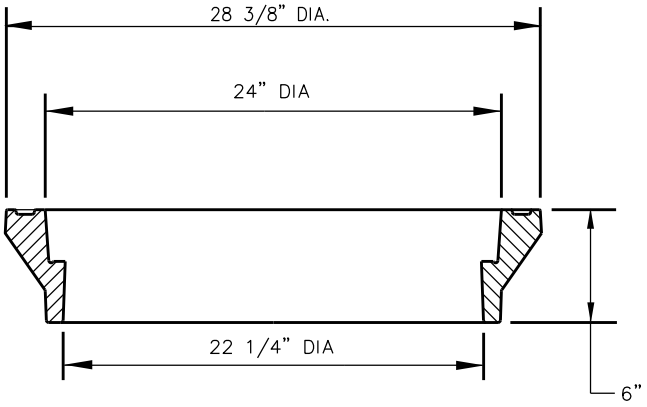

SECTION

BH 380-24R

COVER: 183 LBS
RING: 190 LBS
UNIT: 373 LBS

5/6

Revision Date:

Scale : N/A Date :06/01/05	GARLAND ENGINEERING STANDARD DETAILS	STORM SEWER DETAIL MANHOLE COVER
Design :		
Drawn : GAV		
Dwg. File : SMH_001.DWG		
Project No. : STANDARD-DETAILS		

PAGE 5

GENERAL NOTES

1. EXPOSED EDGES SHALL BE CHAMFERED 3/4".
2. ALTERNATE DESIGN DRAWINGS BEARING THE SEAL OF A REGISTERED PROFESSIONAL ENGINEER WILL BE ACCEPTABLE FOR PRECAST CONSTRUCTION OF MANHOLES.
3. SHOP DRAWINGS WILL NOT BE REQUIRED.
4. THE CONTRACTOR MAY WITH THE APPROVAL OF THE ENGINEER FURNISH MANHOLES OF EQUIVALENT STRUCTURAL DESIGN.
5. IN AREAS OF CONFLICT BETWEEN REINFORCING STEEL, BLOCKOUTS, PIPES, ANCHOR BOLTS OR OTHER REINFORCING STEEL, THE REINFORCEMENT SHALL BE BENT OR ADJUSTED TO CLEAR AS DIRECTED BY THE ENGINEER.
6. THE RISER MAY BE CONSTRUCTED OF REINFORCED CLASS "A" (3000 PSI) CONCRETE AS SHOWN USING REINFORCED CONCRETE PIPE, CLASS III, IN ACCORDANCE WITH ASTM DESIGNATION C-76. IF PIPE IS USED, JOINTS SHALL CONFORM TO THE ITEM "REINFORCED CONCRETE PIPE CULVERTS".
7. CONNECTING PIPES SHOULD BE WITHIN 10 DEGREES OF NORMAL TO THE INLET IF POSSIBLE. PIPE ELBOW OR CURBED APPROACH ALIGNMENT SHOULD BE USED TO STAY WITHIN THIS LIMIT.

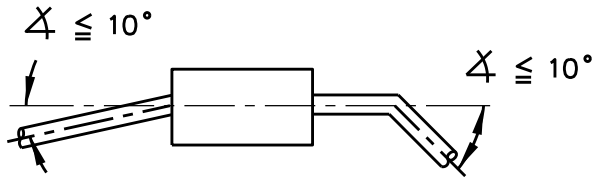

8. PIPES MAY CONNECT ON ANY WALL. THE MAXIMUM LENGTH OF PIPE THAT CAN BE ACCOMODATED IS 60". MORE THAN ONE PIPE MAY ENTER A SIDE SUBJECT TO THE MAXIMUM BOX DIMENSIONS SHOWN. THE CLEAR DISTANCE BETWEEN ADJACENT PIPES SHOULD BE 9" MINIMUM.
9. MANHOLE RING & COVER SHALL BE BASS AND HAYS 380-24R OR APPROVED EQUAL.
10. ALL STORM SEWER STRUCTURES SHALL BE CLASS 'C' CAST-IN-PLACE CONCRETE (UNLESS AUTHORIZED BY CITY OF GARLAND).

6/6

Revision Date: 07/07

Scale : N/A Date :06/01/05	GARLAND ENGINEERING STANDARD DETAILS	STORM SEWER MANHOLE GENERAL NOTES	PAGE 6
Design :			
Drawn : GAV			
Dwg. File : SMH_001.DWG			
Project No. : STANDARD-DETAILS			