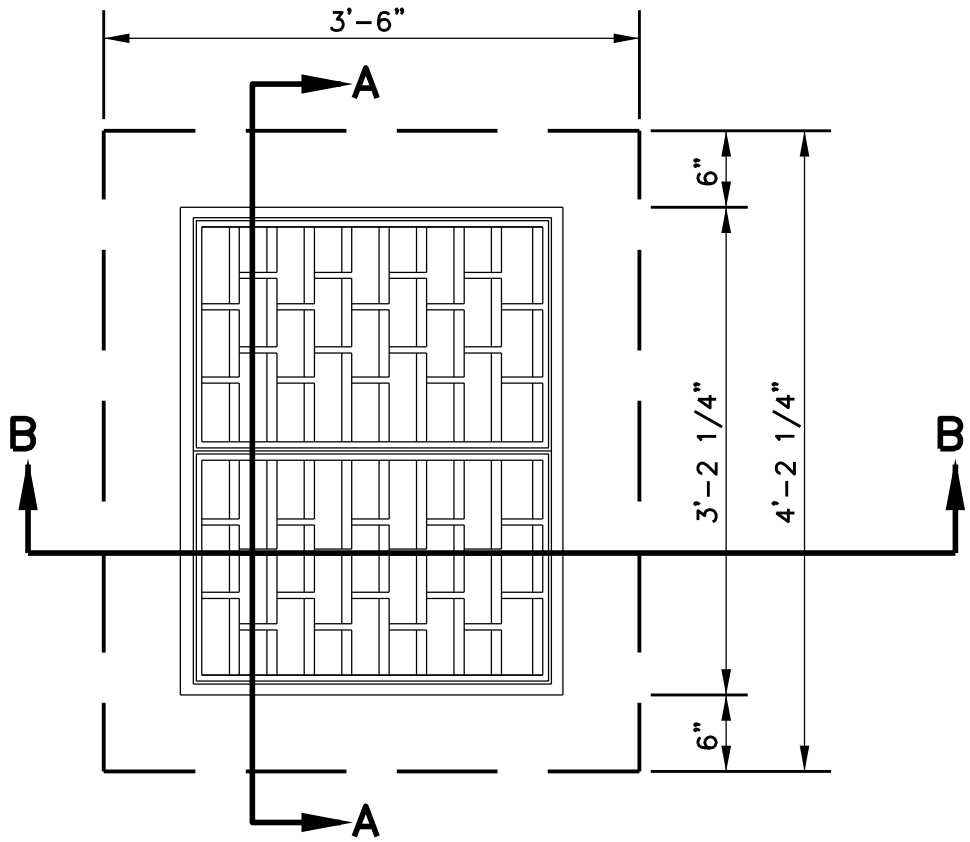

PLAN VIEW

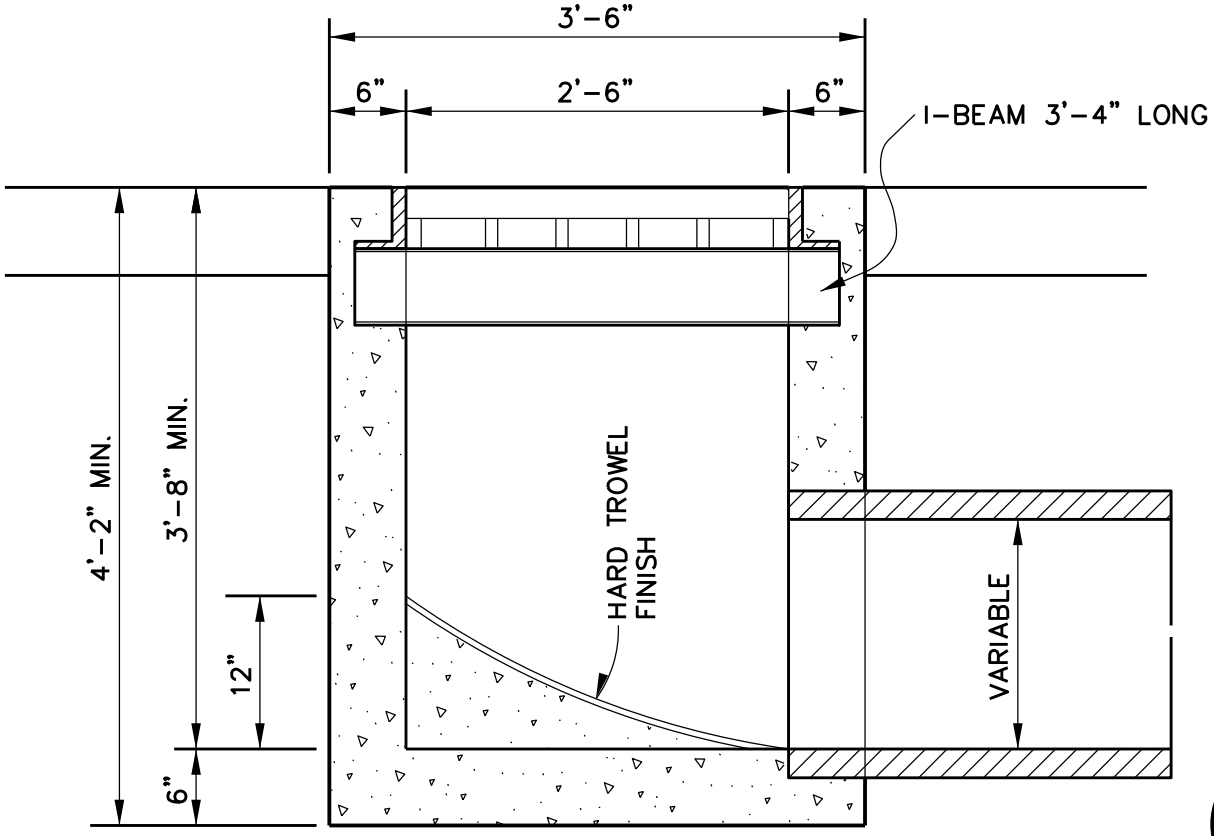

SECTION B-B

1/2

Revision Date:

Scale : N/A Date : 06/01/05	GARLAND ENGINEERING STANDARD DETAILS	TWO GRATE INLET	PAGE 1
Design :			
Drawn : JMK			
Dwg. File : GRA_001.DWG			
Project No. : STANDARD-DETAILS			

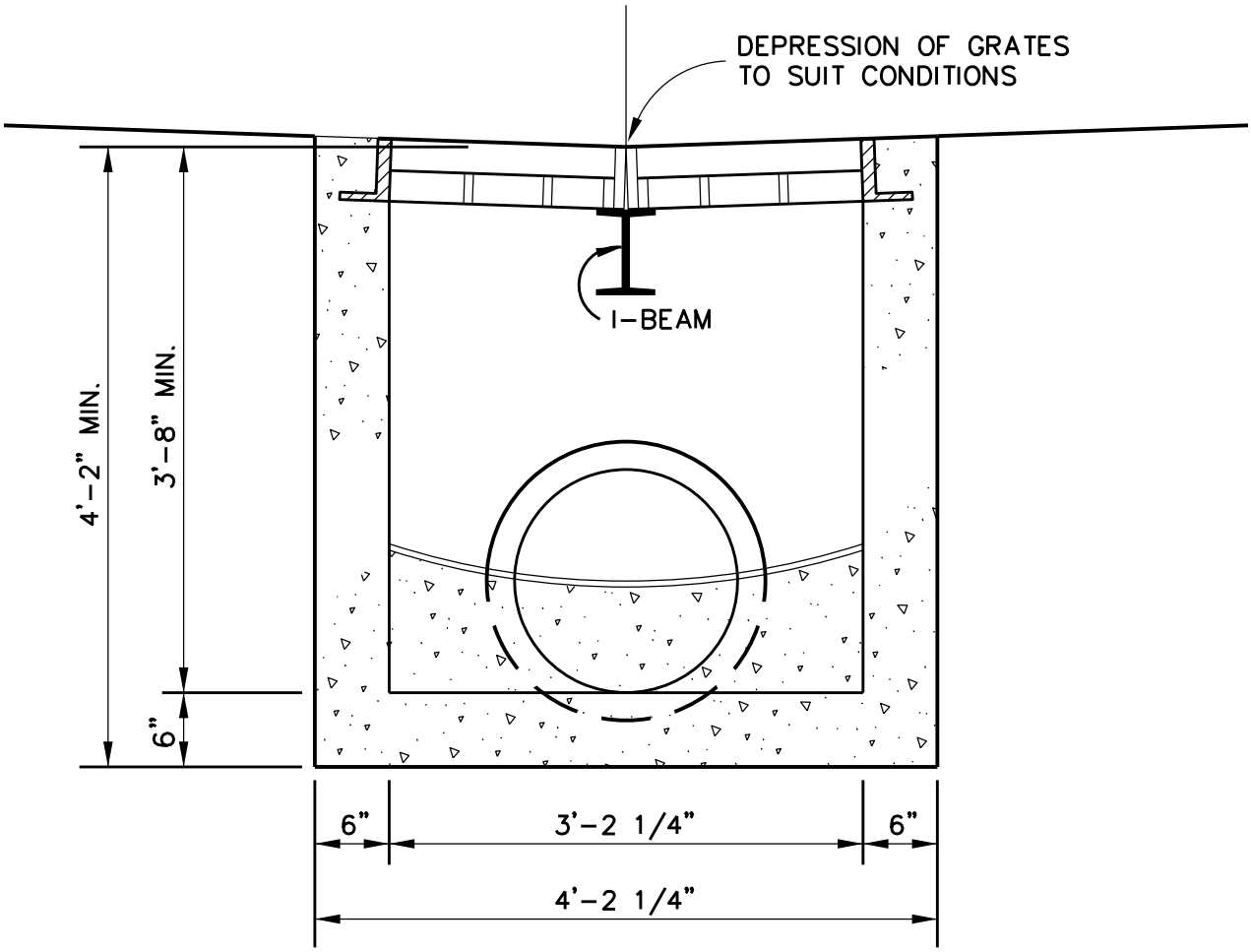

SECTION A-A

1. GRATE SHALL BE BASS & HAYS 814 FOR HS20 LOADING. APPROVED EQUAL GRATES MAY BE USED WITH EQUIVALENT AREA OPENING.
2. IN AREAS WHERE CURB INLETS WILL NOT FUNCTION OR GRADES WARRANT, GRATE INLETS CAN BE SUBMITTED FOR APPROVAL.
3. GRATES LARGER THAN TWO GRATE CAN ONLY BE USED ON PRIVATE PROPERTY WHEN PRIVATELY MAINTAINED.

2/2

Revision Date:

Scale : N/A Date : 06/01/05	GARLAND ENGINEERING STANDARD DETAILS	TWO GRATE INLET	PAGE 2
Design :			
Drawn : JMK			
Dwg. File : GRA_001.DWG			
Project No. : STANDARD-DETAILS			

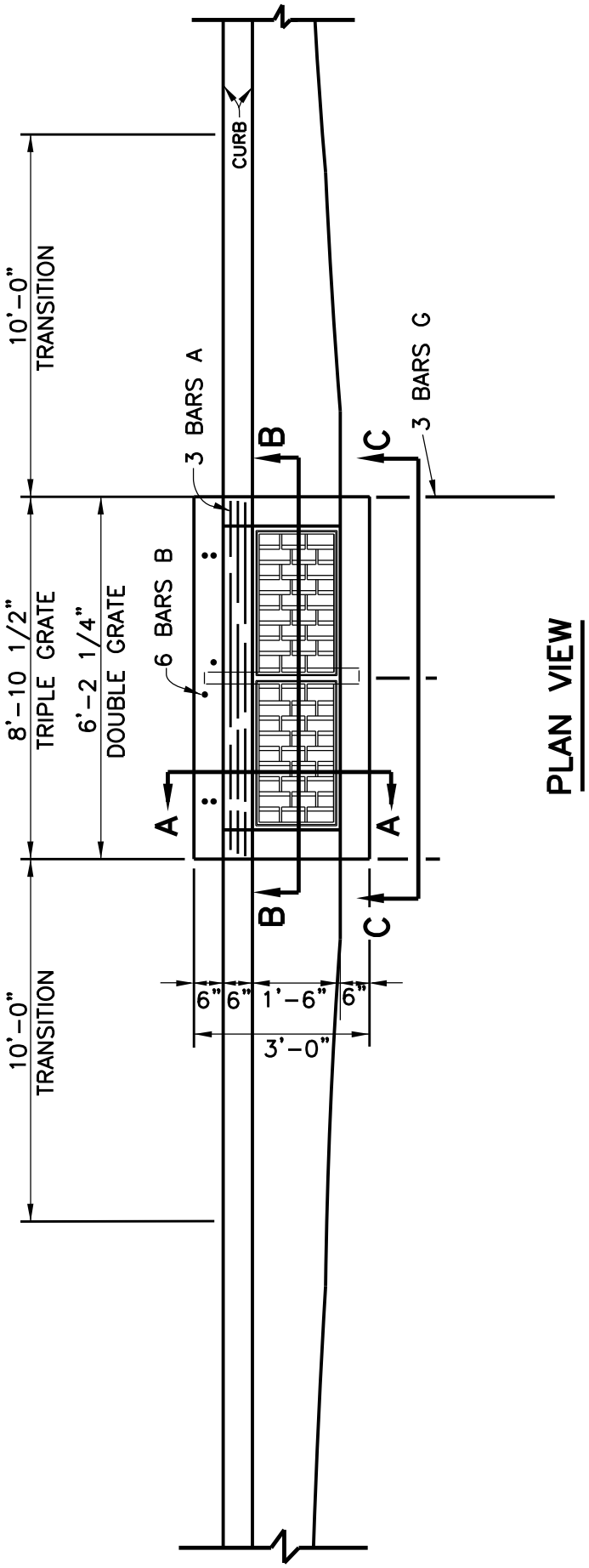

PLAN VIEW

* FOR USE IN ALLEYS ONLY

1/4

Revision Date:			
Scale : N/A Date : 06/01/05	GARLAND ENGINEERING STANDARD DETAILS	STORM WATER DETAILS COMBINATION GRATE INLETS	PAGE 3
Design :			
Drawn : JMK			
Dwg. File : GRA_002.DWG			
Project No. : STANDARD-DETAILS			

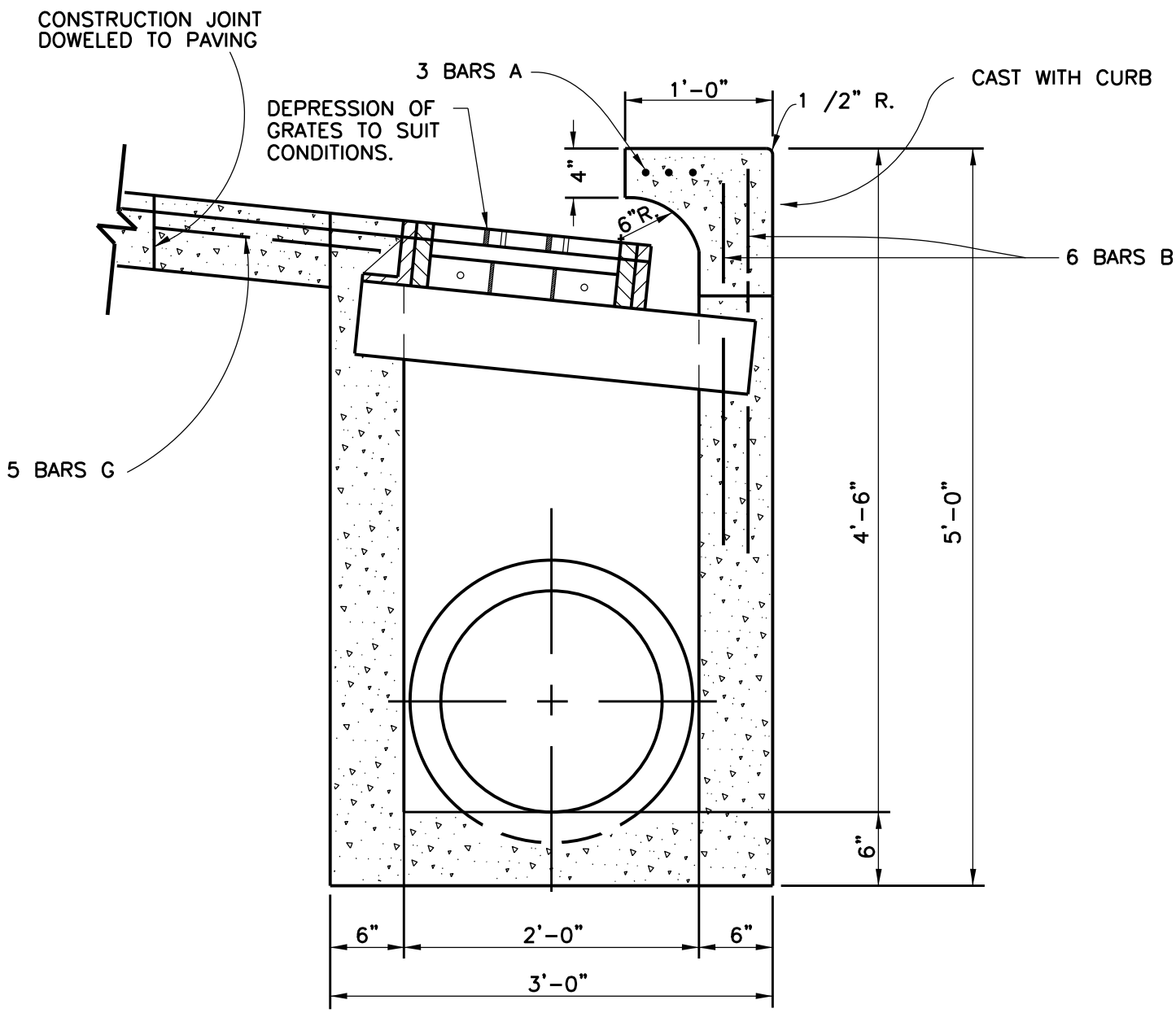

SECTION A-A

NOTES:

1. ALL CONCRETE TO BE CLASS "A".
2. CONCRETE FINISH SHALL BE A CLASS "A" HAND FINISH.
3. EXTRA DEPTH INLETS SHALL BE NOTED ON PLANS.
4. MINIMUM COVERAGE FOR REBAR SHALL BE 2".
5. COMBINATION GRATES ARE APPROVED FOR CONSTRUCTION IN ALLEYS ONLY.

* FOR USE IN ALLEYS ONLY

2/4

Revision Date:			
Scale : N/A Date : 06/01/05	GARLAND ENGINEERING STANDARD DETAILS	DRAINAGE DETAILS COMBINATION GRATE INLETS	PAGE 4
Design :			
Drawn : JMK			
Dwg. File : GRA_002.DWG			
Project No. : STANDARD-DETAILS			

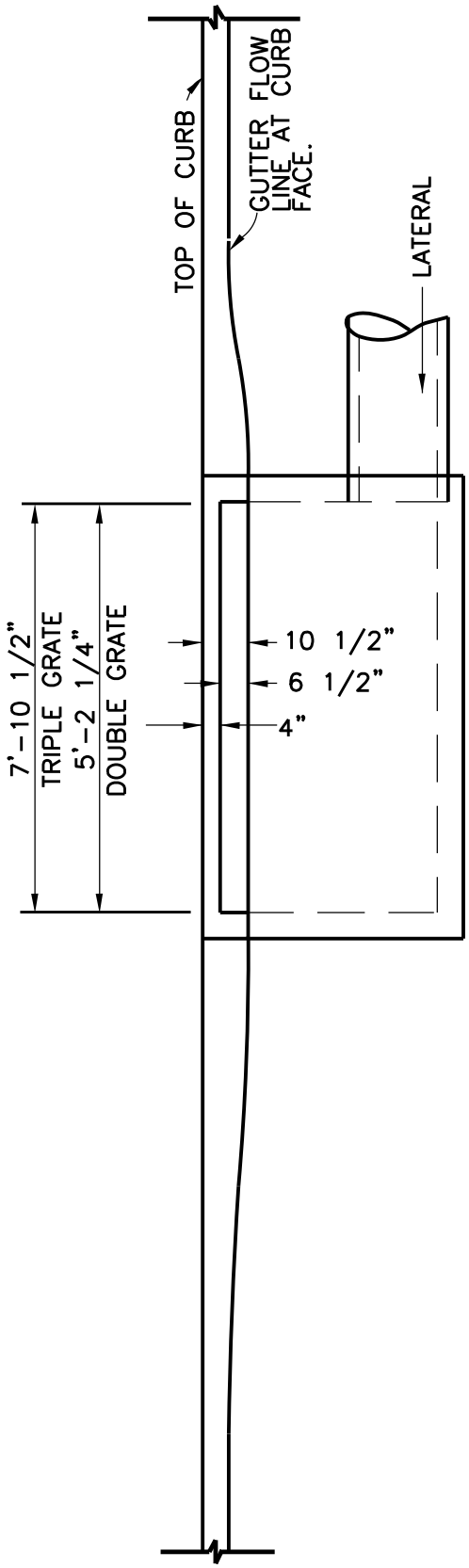

SECTION C-C

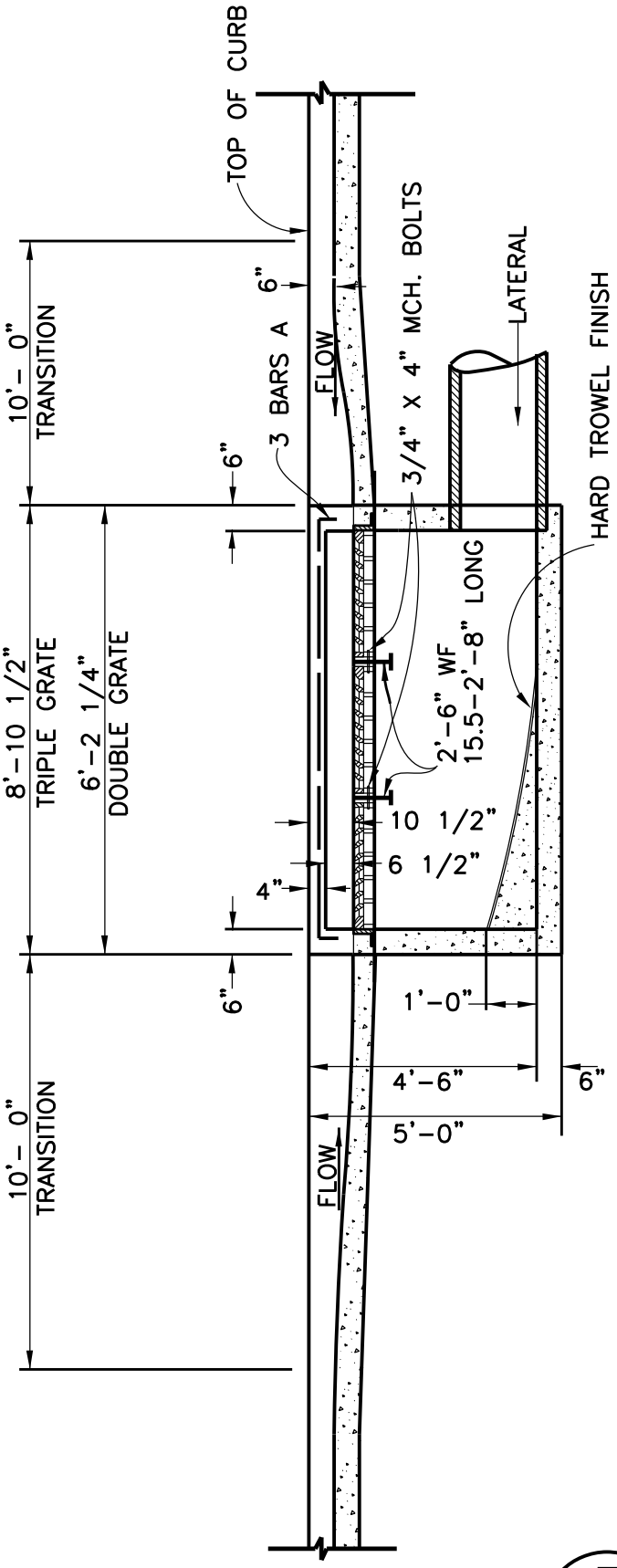

SECTION B-B

* FOR USE IN ALLEYS ONLY

3/4

Revision Date:

Scale : N/A Date : 06/01/05	GARLAND ENGINEERING STANDARD DETAILS	DRAINAGE DETAILS COMBINATION GRATE INLETS	PAGE 5
Design :			
Drawn : JMK			
Dwg. File : GRA_002.DWG			
Project No. : STANDARD-DETAILS			

STEEL DETAIL

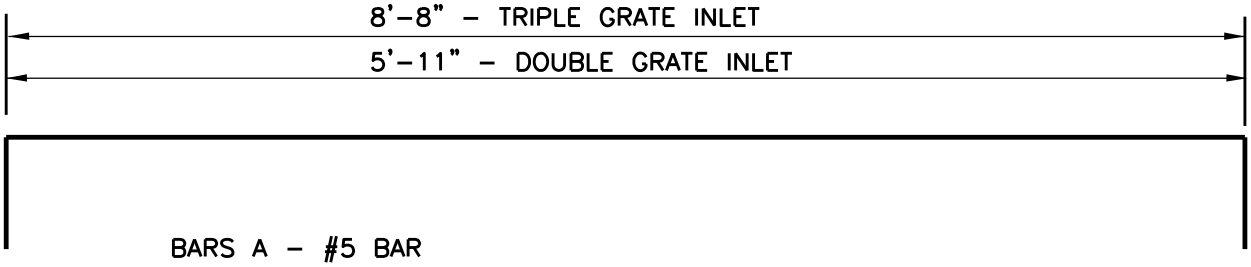

BARS A - #5 BAR
9'-8" LONG (TRIPLE GRATE INLET)
6'-11" LONG (DOUBLE GRATE INLET),
3 REQUIRED.

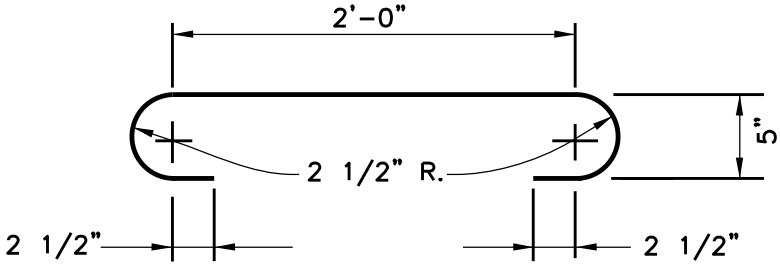

BARS B - #5 BAR, 3'-9' LONG
8 REQUIRED (TRIPLE GRATE INLET)
6 REQUIRED (DOUBLE GRATE INLET)

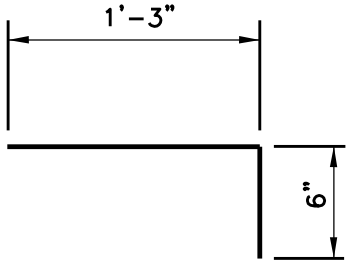

BARS G - #3 BAR, 1'-3" LONG,
5 REQUIRED (TRIPLE GRATE INLET);
3 REQUIRED (DOUBLE GRATE INLET)

NOTE:
1. REBAR SHALL BE A.S.T.M. A615 - GRADE 60.
* FOR USE IN ALLEYS ONLY

4/4

Revision Date:			
Scale : N/A Date : 06/01/05	GARLAND ENGINEERING STANDARD DETAILS	DRAINAGE DETAILS COMBINATION GRATE INLETS STEEL DETAIL	PAGE 6
Design :			
Drawn : JMK			
Dwg. File : GRA_002.DWG			
Project No. : STANDARD-DETAILS			