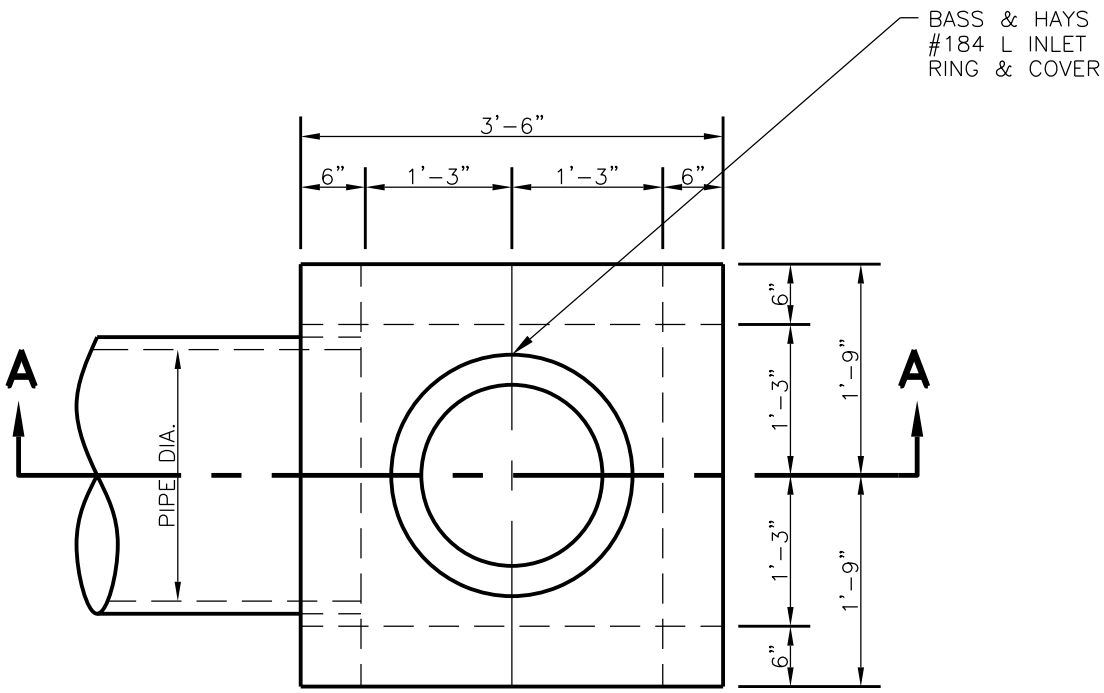

PLAN

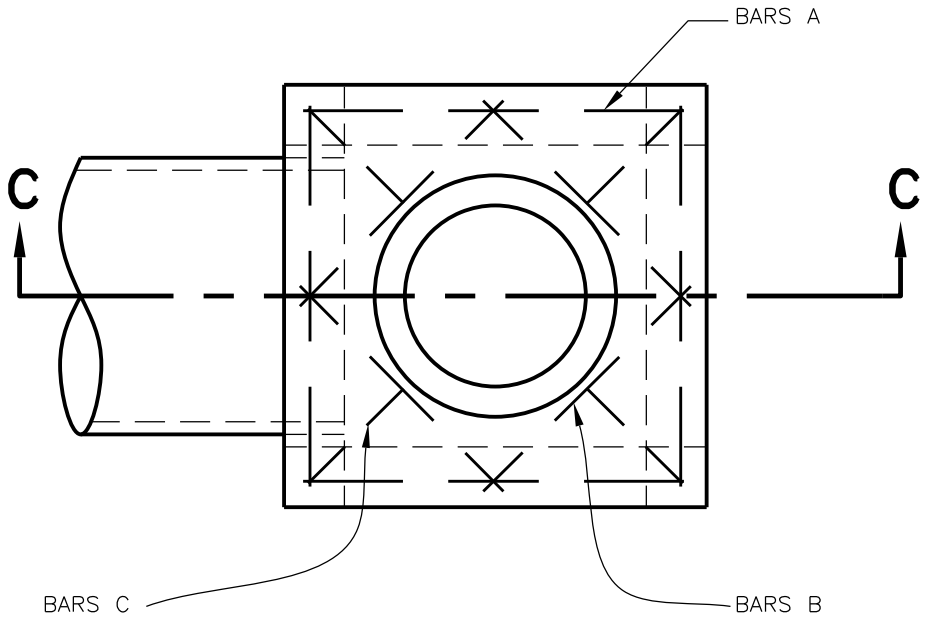

STRUCTURAL PLAN

1/3

Revision Date:

Scale : N/A Date : 06/01/05	GARLAND ENGINEERING STANDARD DETAILS	TYPE I "Y" INLET PLAN	PAGE 1
Design :			
Drawn : COG			
Dwg. File : INL_001.DWG			
Project No. : STANDARD-DETAILS			

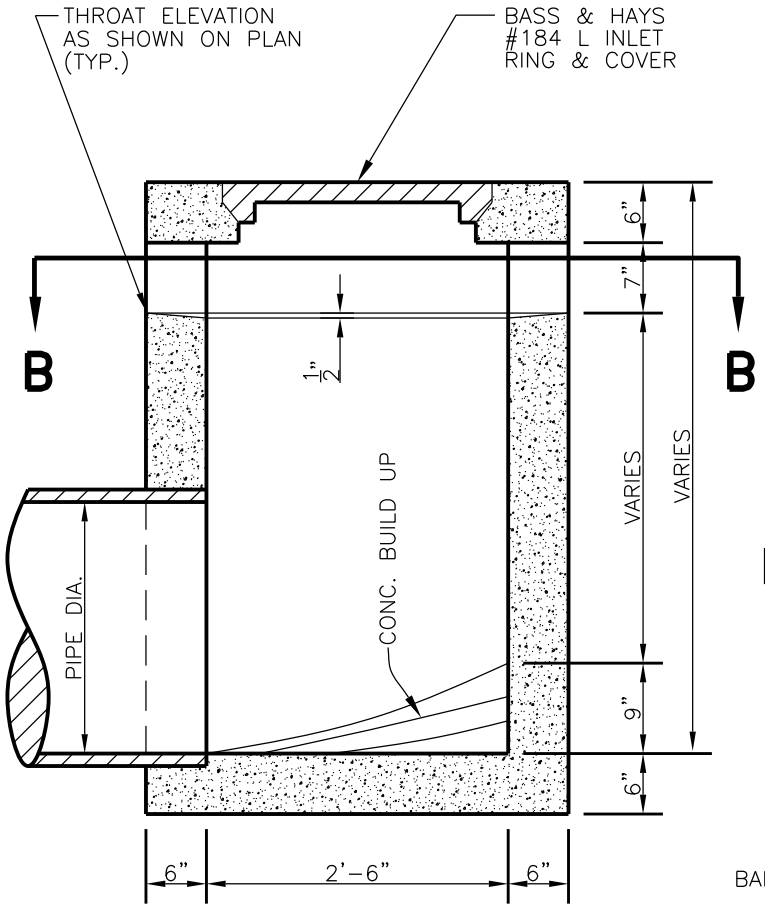

SECTION A-A

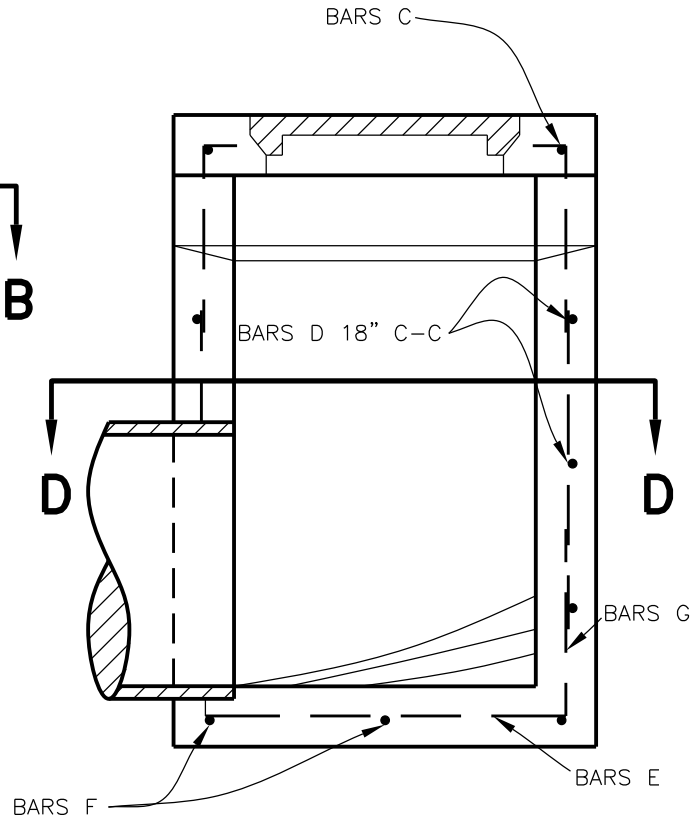

SECTION C-C

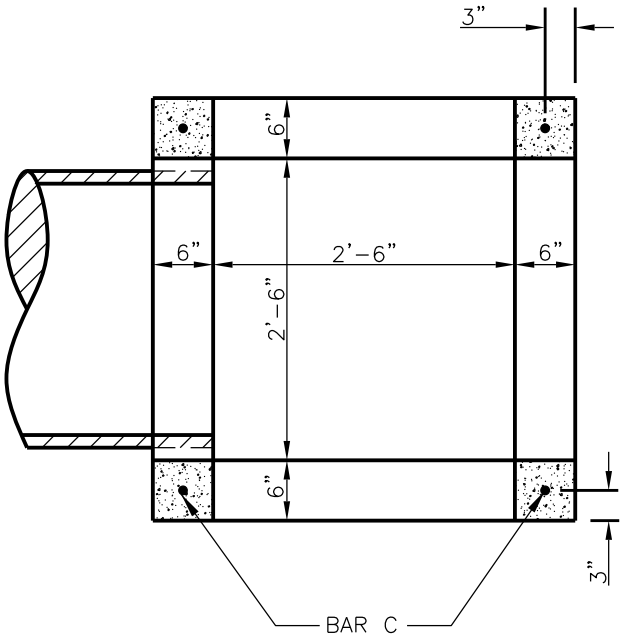

SECTION B-B

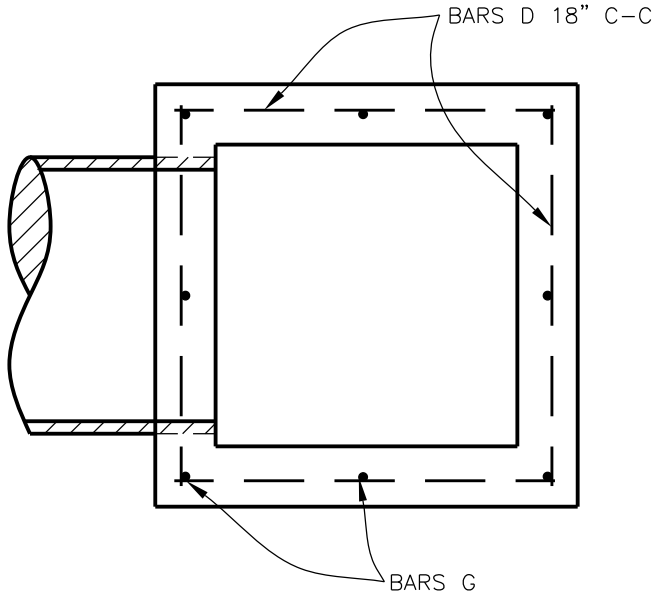

SECTION D-D

2/3

Revision Date:

Scale : N/A Date : 06/01/05	GARLAND ENGINEERING STANDARD DETAILS	TYPE I "Y" INLET SECTIONS
Design :		
Drawn : COG		
Dwg. File : INL_001.DWG		
Project No. : STANDARD-DETAILS		

PAGE 2

TYPE I 'Y' INLET

ITEM	SIZE	QUANTITY	LENGTH	REMARKS
BARS A	NO. 4	4	3'-0"	
B	NO. 4	4	2'-6"	
C	NO. 4	4		18" 15"
D	NO. 4	VARIES	3'-2"	
E	NO. 4	3		18" 36" 18"
F	NO. 4	3		18" 36" 18"
G	NO. 4	6	VARIES	

NOTES:

1. ALL CONCRETE SHALL BE CLASS "A".
2. MINIMUM 2" COVER ON REINFORCEMENT.

3
3

Revision Date:

Scale : N/A Date : 06/01/05
Design :
Drawn : COG
Dwg. File : INL_001.DWG
Project No. : STANDARD-DETAILS

GARLAND
ENGINEERING
STANDARD DETAILS

TYPE I "Y" INLET
CHART

PAGE
3

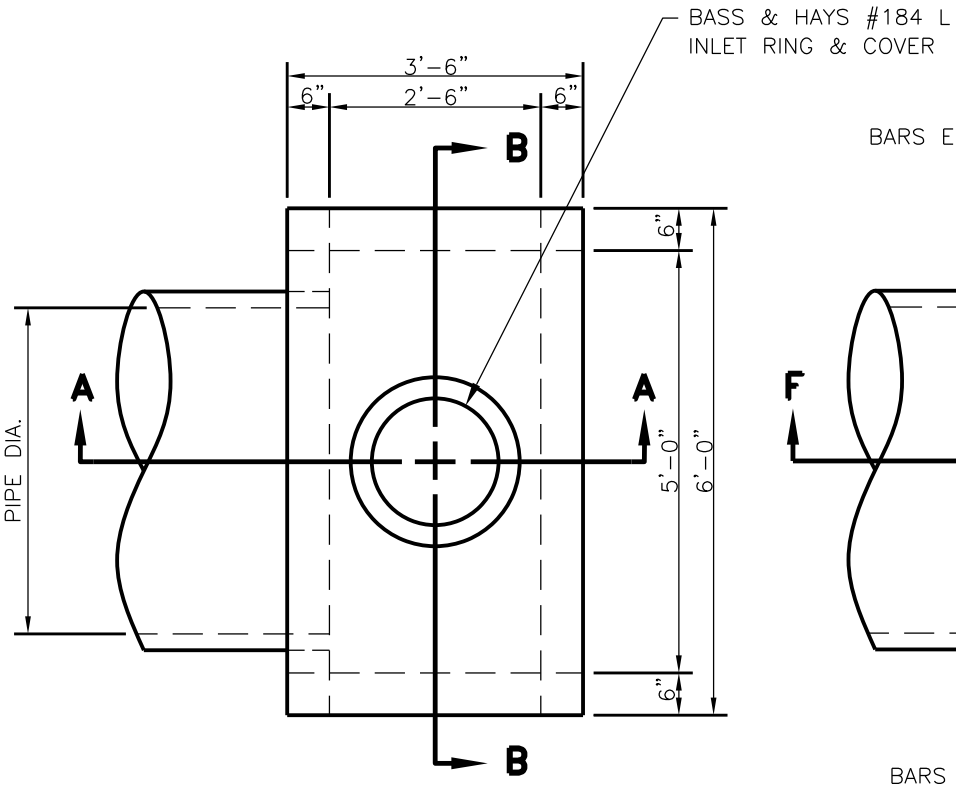

PLAN

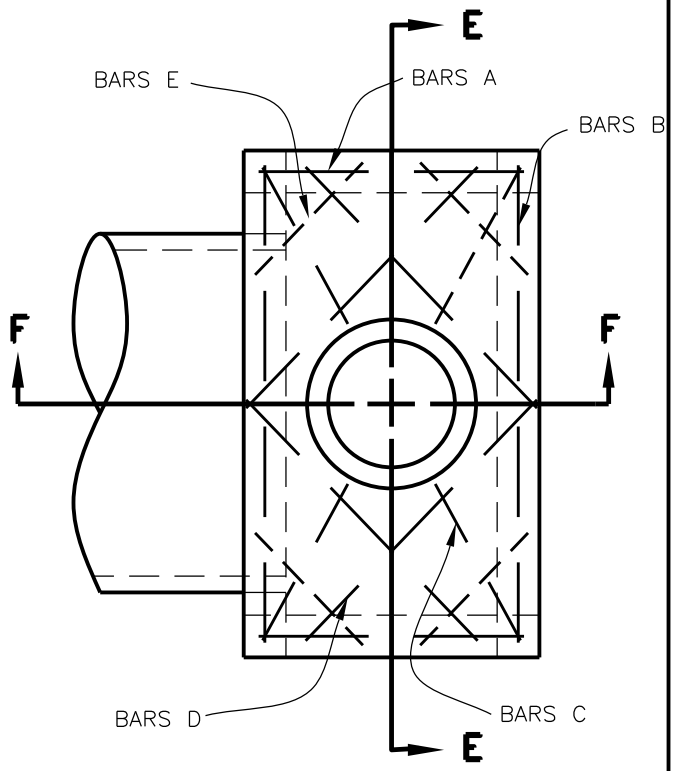

STRUCTURAL PLAN

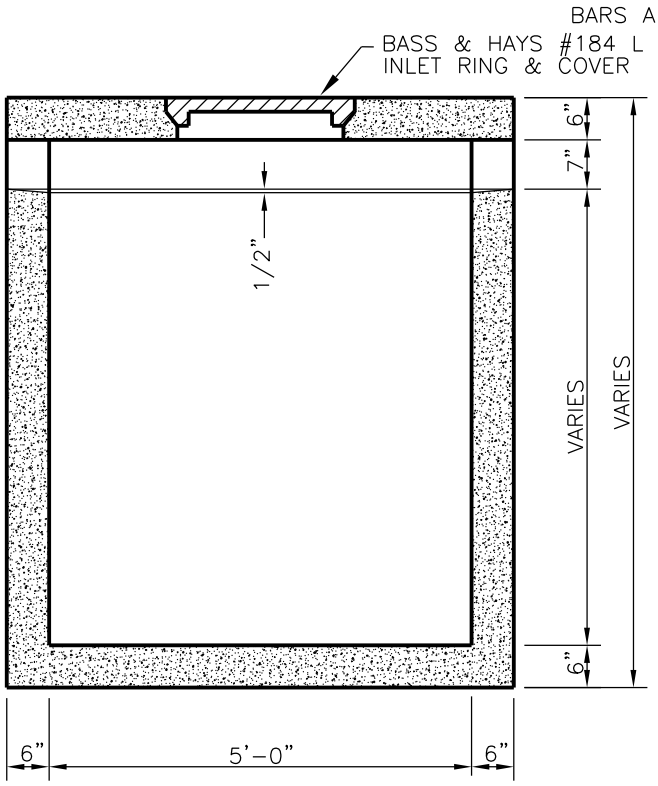

SECTION B-B

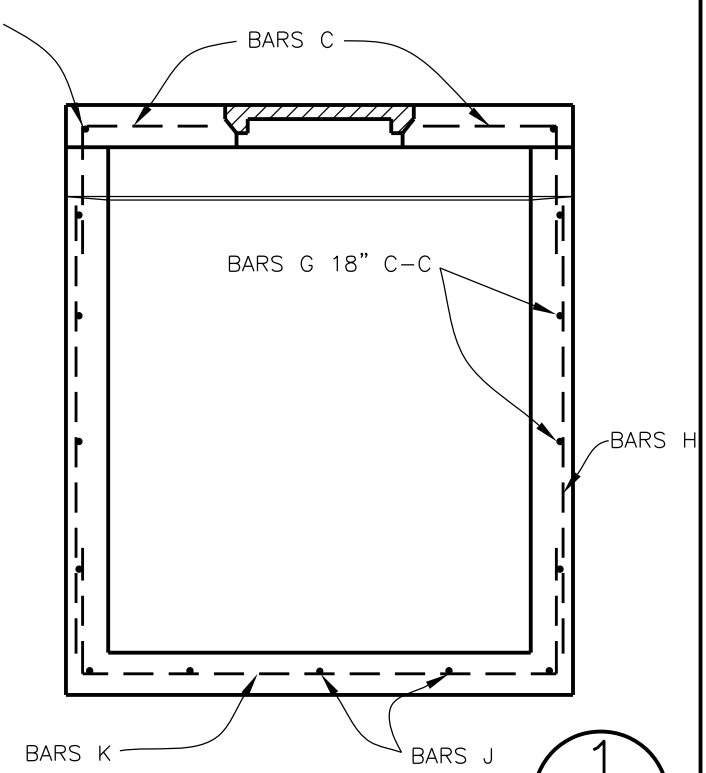

SECTION E-E

1/3

Revision Date:

Scale : N/A Date : 06/01/05	GARLAND ENGINEERING STANDARD DETAILS	TYPE II "Y" INLET PLAN/SECTIONS	PAGE 4
Design :			
Drawn : COG			
Dwg. File : INL_001.DWG			
Project No. : STANDARD-DETAILS			

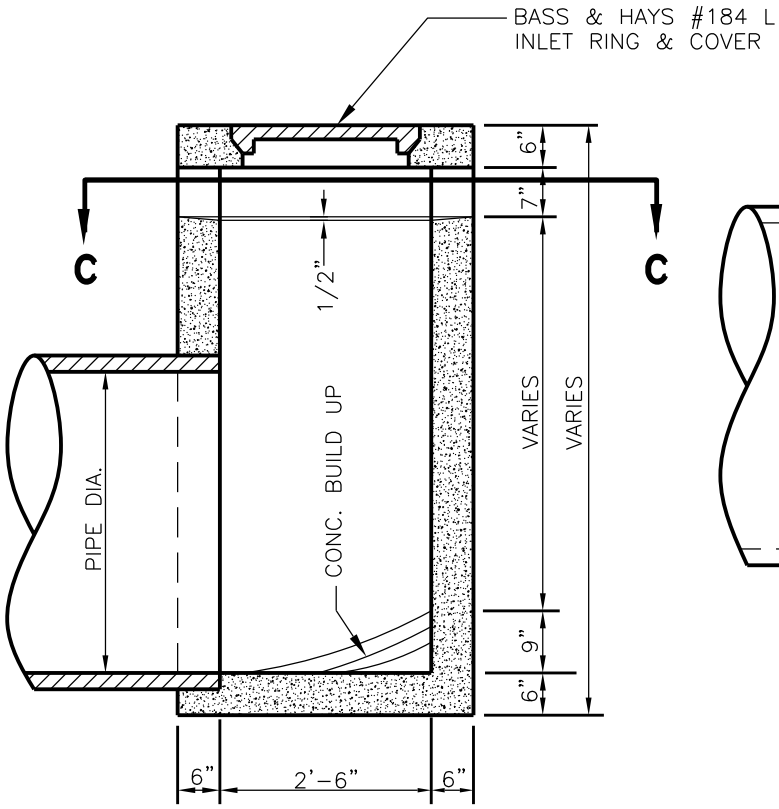

SECTION A-A

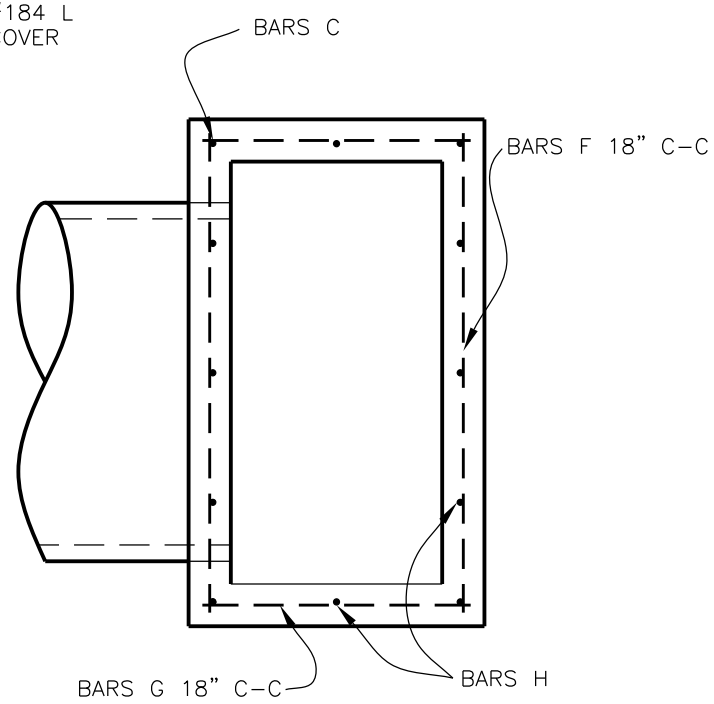

SECTION D-D

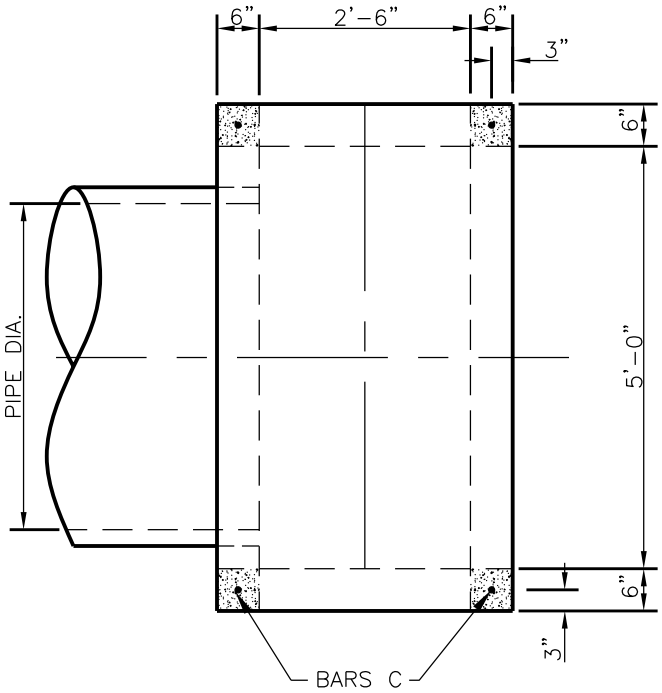

SECTION C-C

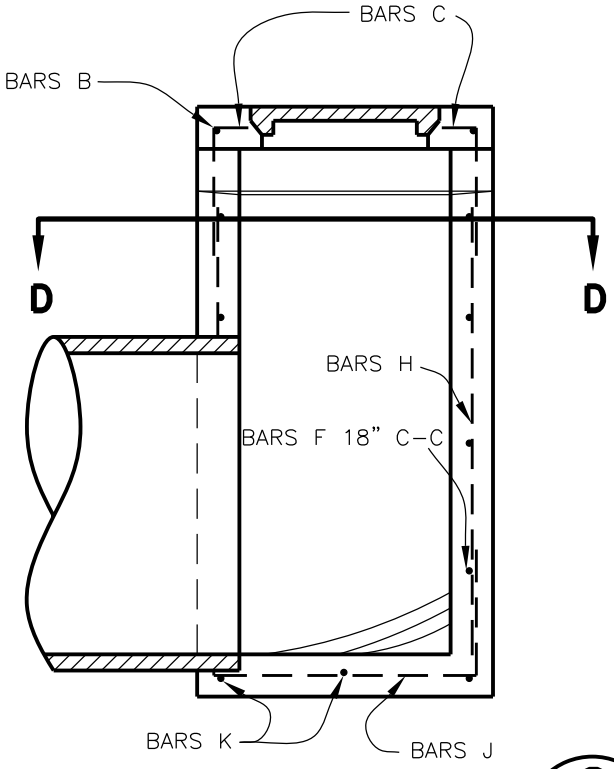

SECTION F-F

2/3

Revision Date:

Scale : N/A Date : 06/01/05	GARLAND ENGINEERING STANDARD DETAILS	TYPE II "Y" INLET SECTIONS	PAGE 5
Design :			
Drawn : COG			
Dwg. File : INL_001.DWG			
Project No. : STANDARD-DETAILS			

TYPE II 'Y' INLET

ITEM		SIZE	QUANTITY	LENGTH	REMARKS
BARS	A	NO. 4	2	3'-0"	
	B	NO. 4	2	5'-6"	
	C	NO. 4	4		24" 15"
	D	NO. 4	4	4'-0"	
	E	NO. 4	4	2'-0"	
	F	NO. 4	VARIES	5'-6"	
	G	NO. 4	VARIES	3'-0"	
	H	NO. 4	12	VARIES	
	J	NO. 4	5		18" 36" 18"
	K	NO. 4	3		18" 66" 18"

3/3

Revision Date:

Scale : N/A Date : 06/01/05
Design :
Drawn : COG
Dwg. File : INL_001.DWG
Project No. : STANDARD-DETAILS

GARLAND ENGINEERING
STANDARD DETAILS

TYPE II "Y" INLET CHART

PAGE 6

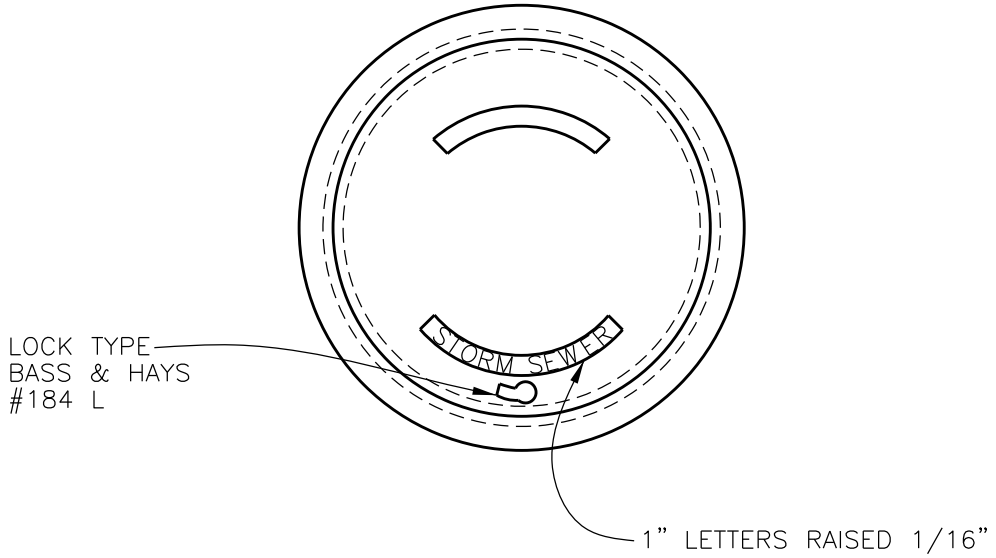

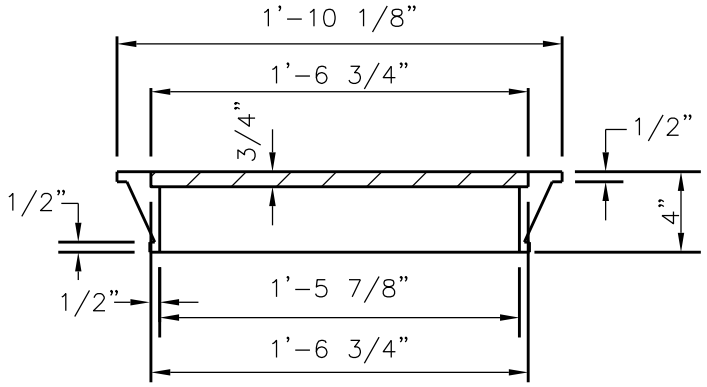

INLET COVER DETAIL

1
1

Revision Date:

Scale : N/A Date : 06/01/05	GARLAND ENGINEERING STANDARD DETAILS	INLET COVER DETAIL	PAGE 7
Design :			
Drawn : COG			
Dwg. File : INL_001.DWG			
Project No. : STANDARD-DETAILS			