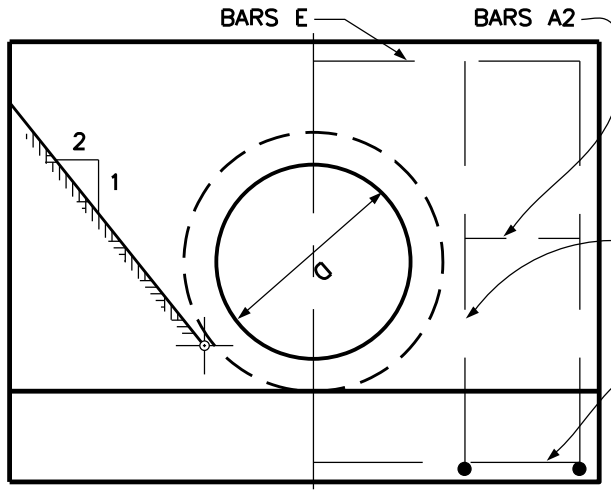

ELEVATION TYPE A

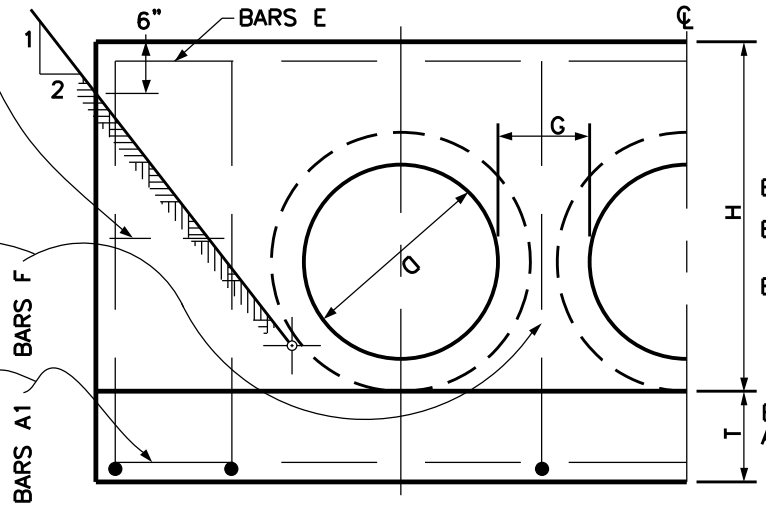

ELEVATION MULTIPLE TYPE A

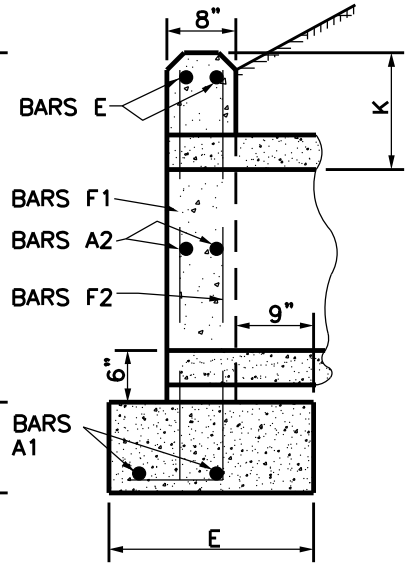

℄ SECTION

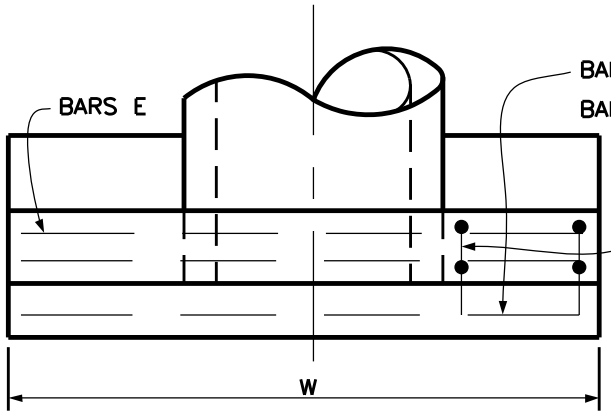

PLAN TYPE A

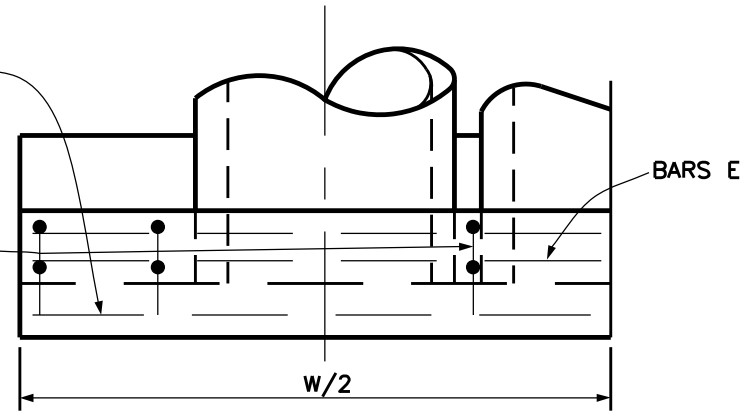

PLAN MULTIPLE TYPE A

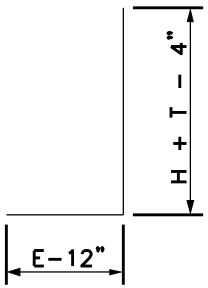

BARS F2

NOTES:
1. DIMENSIONS ARE FOR TYPICAL INSTALLATION.
2. SPECIFIC SITE CONDITIONS MAY REQUIRE MODIFICATION OF DIMENSIONS AND ARRANGEMENT, WITH ENGINEERING DEPT. APPROVAL.
3. ALL CONCRETE SHALL BE CLASS "C".
4. NO FINISHED SLOPE GREATER THAN 3:1 ALLOWED.
5. PROVIDE CHANNEL LINING AS REQUIRED AT HEADWALLS.
6. ALL HEADWALLS SHALL BE CLASS 'C' CAST-IN-PLACE CONCRETE (UNLESS AUTHORIZED BY CITY OF GARLAND).

1 | 2

Revision Date: 07/07

Scale : N/A Date : 02/21/05
Design :
Drawn : JMK
Dwg. File : HDW_001.DWG
Project No. : STANDARD-DETAILS

GARLAND ENGINEERING
STANDARD DETAILS

TYPE A HEADWALL

TABLE OF DIMENSIONS AND QUANTITIES FOR TWO TYPE A HEADWALLS

NO. OF PIPES	DIAM. OF PIPES	TABLE OF DIMENSIONS						REINF. STEEL FOR TWO HEADWALLS															TOTAL QUANTITIES	
								BARS A1 4–#3		BARS A2 #3 at 18"±			BARS E 4–#5		BARS F1 at 12"±				BARS F2 at 12"±				STEEL	CONC.
		G	K	T	E	H	W	Lgth.	Wt.	No.	Lgth.	Wt.	Lgth.	Wt.	No.	Size	Lgth.	Wt.	No.	Size	Lgth.	Wt.	LBS.	C.Y.
1	12"	–	12"	9"	1'–9"	2'–6"	7'–0"	6'–8"	10	8	2'–6"	8	6'–8"	28	12	#4	2'–11"	23	12	#4	3'–8"	29	98	1.48
2	"	10"	"	"	"	"	8'–10"	8'–6"	13	"	"	"	8'–6"	35	14	"	"	27	14	"	"	34	117	1.81
3	"	"	"	"	"	"	10'–8"	10'–4"	16	"	"	"	10'–4"	43	16	"	"	31	16	"	"	39	137	2.15
4	"	"	"	"	"	"	12'–6"	12'–2"	18	"	"	"	12'–2"	51	18	"	"	35	18	"	"	44	156	2.48
1	15"	–	12"	9"	1'–9"	2'–9"	8'–3"	7'–11"	12	8	3'–0"	9	7'–11"	33	12	#4	3'–2"	25	12	#4	3'–11"	31	110	1.82
2	"	1'–0"	"	"	"	"	10'–6"	10'–2"	15	"	"	"	10'–2"	42	14	"	"	30	14	"	"	37	133	2.24
3	"	"	"	"	"	"	12'–9"	12'–5"	19	"	"	"	12'–5"	52	16	"	"	34	16	"	"	42	156	2.66
4	"	"	"	"	"	"	15'–0"	14'–8"	22	"	"	"	14'–8"	61	18	"	"	38	18	"	"	47	177	3.09
1	18"	–	12"	9"	1'–9"	3'–0"	9'–6"	9'–2"	14	8	3'–6"	11	9'–2"	38	20	#4	3'–5"	46	20	#4	4'–2"	56	165	2.19
2	"	1'–2"	"	"	"	"	12'–2"	11'–10"	18	"	"	"	11'–10"	49	22	"	"	50	22	"	"	61	189	2.70
3	"	"	"	"	"	"	14'–10"	14'–6"	22	"	"	"	14'–6"	60	24	"	"	55	24	"	"	67	215	3.21
4	"	"	"	"	"	"	17'–6"	17'–2"	26	"	"	"	17'–2"	72	26	"	"	59	26	"	"	72	240	3.73
1	21"	–	12"	9"	2'–0"	3'–6"	12'–0"	11'–8"	18	8	4'–6"	14	11'–8"	49	24	#4	3'–11"	63	24	#4	4'–11"	79	223	3.17
2	"	1'–5"	"	"	"	"	15'–5"	15'–1"	23	"	"	"	15'–1"	63	26	"	"	68	26	"	"	85	253	3.89
3	"	"	"	"	"	"	18'–10"	18'–6"	28	"	"	"	18'–6"	77	28	"	"	73	28	"	"	92	284	4.62
4	"	"	"	"	"	"	22'–3"	21'–11"	33	"	"	"	21'–11"	91	30	"	"	79	30	"	"	99	316	5.35
1	24"	–	12"	9"	2'–0"	3'–6"	12'–0"	11'–8"	18	8	4'–6"	14	11'–8"	49	24	#4	3'–11"	63	24	#4	4'–11"	79	223	3.17
2	"	1'–5"	"	"	"	"	15'–5"	15'–1"	23	"	"	"	15'–1"	63	26	"	"	68	26	"	"	85	253	3.89
3	"	"	"	"	"	"	18'–10"	18'–6"	28	"	"	"	18'–6"	77	28	"	"	73	28	"	"	92	284	4.62
4	"	"	"	"	"	"	22'–3"	21'–11"	33	"	"	"	21'–11"	91	30	"	"	79	30	"	"	99	316	5.35
1	30"	–	12"	9"	2'–3"	4'–0"	14–6"	14'–2"	21	16	5'–6"	33	14'–2"	59	28	#4	4'–5"	83	28	#4	5'–8"	106	302	4.31
2	"	1'–8"	"	"	"	"	18'–8"	18'–4"	28	"	"	"	18'–4"	76	32	"	"	94	32	"	"	121	352	5.28
3	"	"	"	"	"	"	2'–10"	22'–6"	34	"	"	"	22'–6"	94	36	"	"	106	36	"	"	136	403	6.26
4	"	"	"	"	"	"	27'–0"	26'–8"	40	"	"	"	26'–8"	111	40	"	"	118	40	"	"	152	454	7.24
1	36"	–	12"	12"	2'–6"	4'–6"	17'–0"	16'–8"	25	16	6'–6"	39	16'–8"	70	32	#4	5'–2"	111	32	#4	6'–8"	143	388	6.40
2	"	1'–11"	"	"	"	"	21'–11"	21'–7"	32	"	"	"	21'–7"	90	36	"	"	124	36	"	"	160	445	7.89
3	"	"	"	"	"	"	26'–10"	26'–6"	40	"	"	"	26'–6"	111	40	"	"	138	40	"	"	178	506	9.37
4	"	"	"	"	"	"	31'–9"	31'–5"	47	"	"	"	31'–5"	131	44	"	"	152	44	"	"	196	565	10.85
1	42"	–	12"	12"	2'–9"	5'–0"	19'–6"	19'–2"	29	16	7'–6"	45	19'–2"	80	36	#4	5'–8"	136	36	#4	7'–5"	178	468	8.10
2	"	2'–2"	"	"	"	"	25'–2"	24'–10"	37	"	"	"	24'–10"	104	40	"	"	152	40	"	"	198	536	9.96
3	"	"	"	"	"	"	30'–10"	30'–6"	46	"	"	"	30'–6"	127	44	"	"	167	44	"	"	218	603	11.80
4	"	"	"	"	"	"	36'–6"	36'–2"	54	"	"	"	36'–2"	151	48	"	"	182	48	"	"	238	670	13.68
1	48"	–	15"	12"	3'–0"	5'–9"	23'–0"	22'–8"	34	24	8'–9"	79	22'–8"	95	40	#5	6'–5"	268	40	#5	8'–5"	351	827	10.74
2	"	2'–5"	"	"	"	"	29'–5"	29'–1"	44	"	"	"	29'–1"	121	44	"	"	295	44	"	"	386	925	13.08
3	"	"	"	"	"	"	35'–10"	35'–6"	53	"	"	"	35'–6"	148	48	"	"	321	48	"	"	422	1023	15.43
4	"	"	"	"	"	"	42'–3"	41'–11"	63	"	"	"	41'–11"	175	52	"	"	348	52	"	"	457	1122	17.77
1	54"	–	15"	12"	3'–3"	6'–3"	25'–6"	25'–2"	38	24	9'–9"	88	25'–2"	105	44	#5	6'–11"	318	44	#5	9'–2"	421	970	12.87
2	"	2'–10"	"	"	"	"	32'–10"	32'–6"	49	"	"	"	32'–6"	136	50	"	"	361	50	"	"	478	1112	15.77
3	"	"	"	"	"	"	40'–2"	39'–10"	60	"	"	"	39'–10"	166	56	"	"	404	56	"	"	536	1254	18.66
4	"	"	"	"	"	"	47'–6"	47'–2"	71	"	"	"	47'–2"	197	62	"	"	447	62	"	"	593	1396	21.55
1	60"	–	15"	12"	3'–6"	6'–9"	28'–0"	27'–8"	42	24	10'–9"	97	27'–8"	115	48	#5	7'–5"	371	48	#5	9'–11"	497	1122	15.20
2	"	3'–0"	"	"	"	"	36'–0"	35'–8"	54	"	"	"	35'–8"	149	54	"	"	418	54	"	"	559	1277	18.55
3	"	"	"	"	"	"	44'–0"	43'–8"	66	"	"	"	43'–8"	182	60	"	"	464	60	"	"	621	1430	21.89
4	"	"	"	"	"	"	52'–0"	51'–8"	78	"	"	"	51'–8"	216	66	"	"	511	66	"	"	683	1585	25.24
1	66"	–	15"	12"	3'–9"	7'–3"	30'–6"	30'–2"	45	32	11'–9"	141	30'–2"	126	52	#5	7'–11"	430	52	#5	10'–8"	579	1321	17.72
2	"	3'–1"	"	"	"	"	39'–1"	38'–9"	58	"	"	"	38'–9"	162	58	"	"	479	58	"	"	645	1485	21.49
3	"	"	"	"	"	"	47'–8"	47'–4"	78	"	"	"	47'–4"	198	64	"	"	529	64	"	"	712	1651	25.27
4	"	"	"	"	"	"	56'–3"	55'–11"	84	"	"	"	55'–11"	233	70	"	"	578	70	"	"	779	1815	29.05
1	72"	–	15"	12"	4'–0"	7'–9"	33'–0"	32'–8"	49	32	12'–9"	153	32'–8"	136	56	#5	8'–5"	492	56	#5	11'–5"	667	1497	20.42
2	"	3'–2"	"	"	"	"	42'–2"	41'–10"	63	"	"	"	41'–10"	175	62	"	"	544	62	"	"	738	1673	24.66
3	"	"	"	"	"	"	51'–4"	51'–0"	77	"	"	"	51'–0"	213	68	"	"	597	68	"	"	810	1850	28.89
4	"	"	"	"	"	"	60'–6"	60'–2"	90	"	"	"	60'–2"	251	74	"	"	650	74	"	"	881	2025	33.12

Revision Date:

Scale : N/A Date : 02/21/05

Design :

Drawn : JMK

Dwg. File : HDW_001.DWG

Project No. : STANDARD–DETAILS

GARLAND ENGINEERING

STANDARD DETAILS

TYPE A HEADWALLS DIMENSIONS AND QUANTITIES TABLE

PAGE 2

2/2

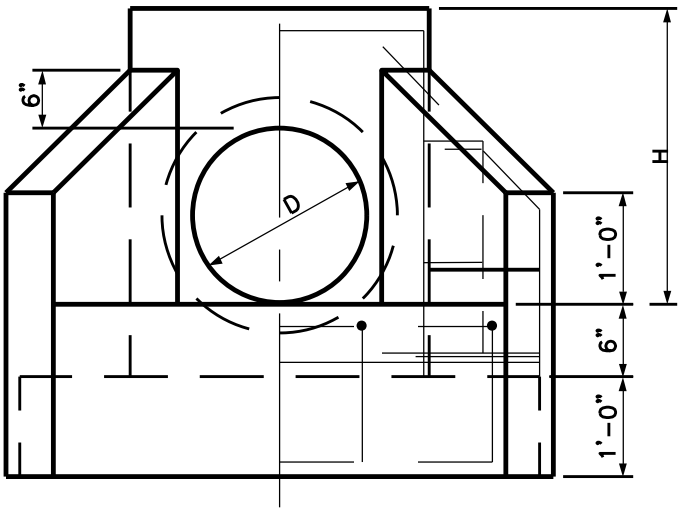

ELEVATION TYPE B

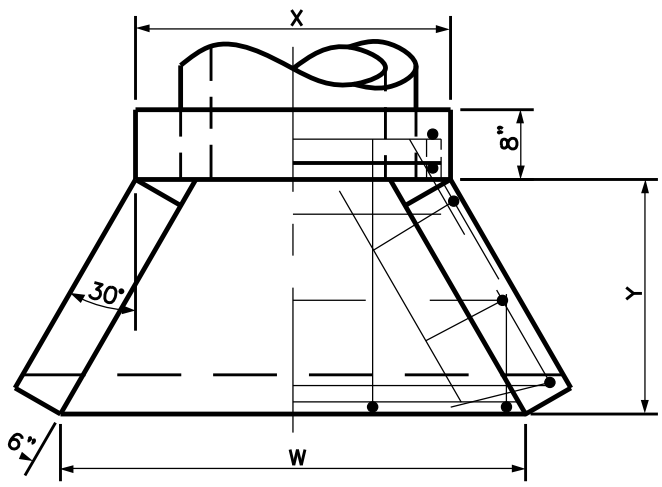

PLAN TYPE B

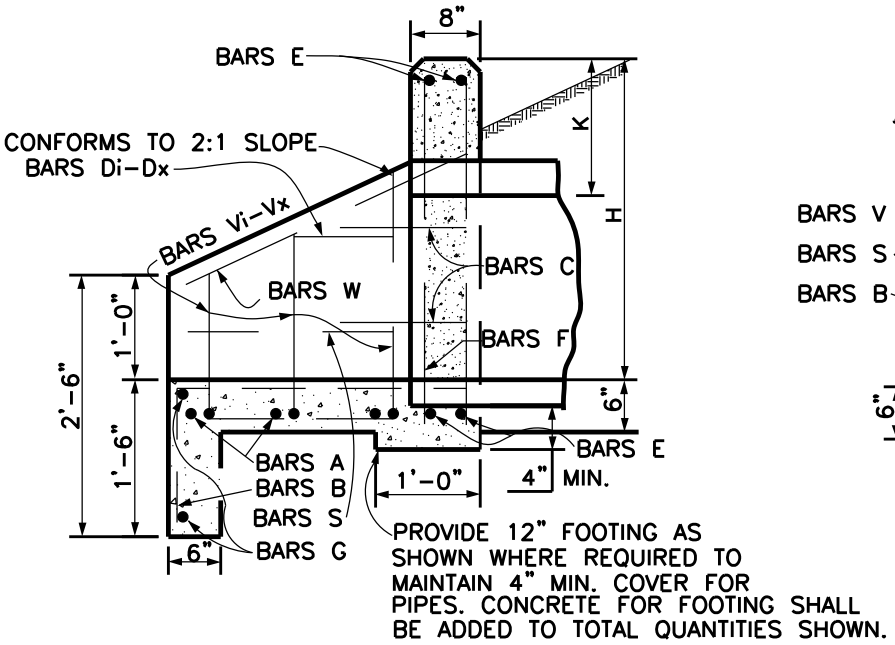

TYPICAL WING ELEVATION

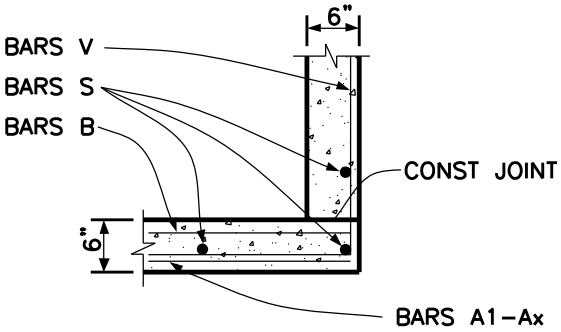

NOTES:
1. DIMENSIONS ARE FOR TYPICAL INSTALLATION.
2. SPECIFIC SITE CONDITIONS MAY REQUIRE MODIFICATION OF DIMENSIONS AND ARRANGEMENT, WITH ENGINEERING DEPT. APPROVAL.
3. ALL CONCRETE SHALL BE CLASS "C".
4. ALL HEADWALLS SHALL BE CLASS 'C' CAST-IN-PLACE CONCRETE (UNLESS AUTHORIZED BY CITY OF GARLAND)

1/3

Revision Date: 07/07

Scale : N/A Date : 02/21/05	GARLAND ENGINEERING STANDARD DETAILS	TYPE B HEADWALL	PAGE 3
Design :			
Drawn : JMK			
Dwg. File : HDW_001.DWG			
Project No. : STANDARD-DETAILS			

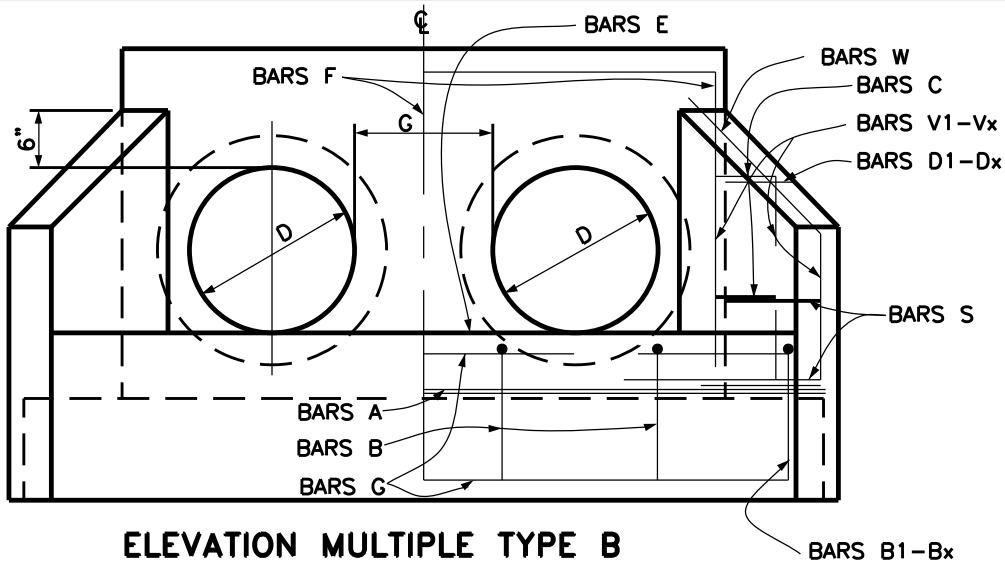

ELEVATION MULTIPLE TYPE B

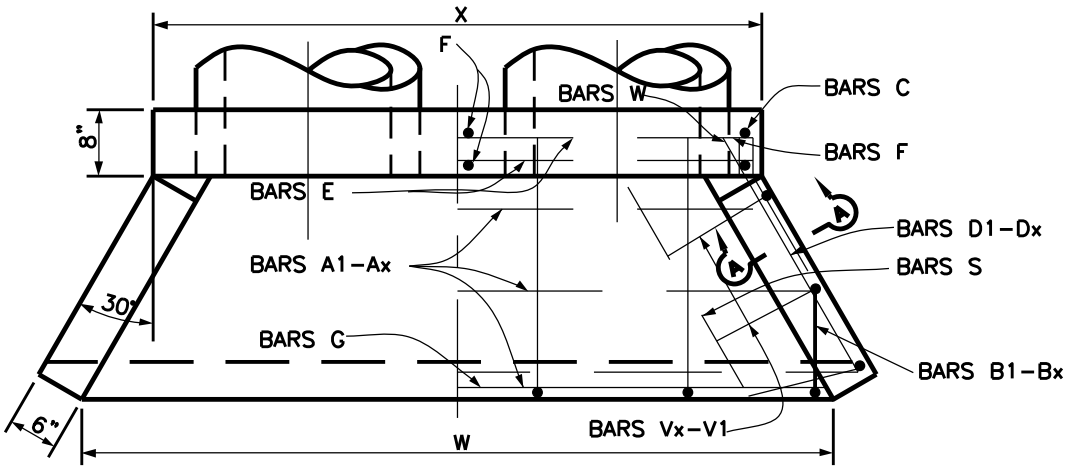

PLAN MULTIPLE TYPE B

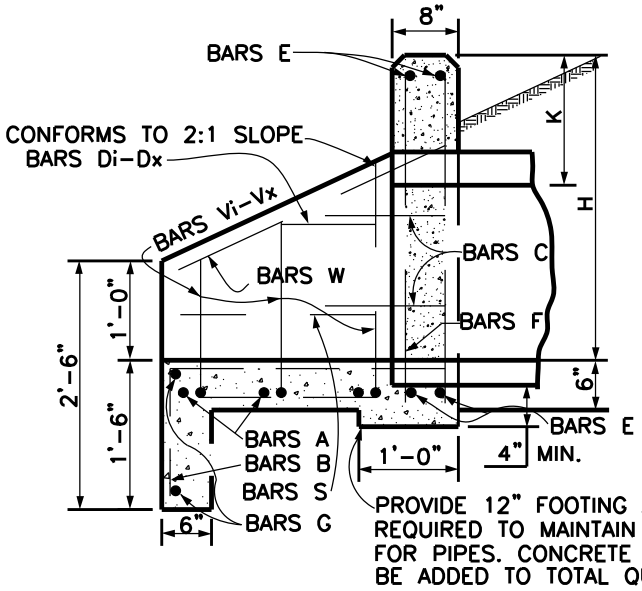

PROVIDE 12" FOOTING AS SHOWN WHERE REQUIRED TO MAINTAIN 4" MIN. COVER FOR PIPES. CONCRETE FOR FOOTING SHALL BE ADDED TO TOTAL QUANTITIES SHOWN.

TYPICAL WING ELEVATION

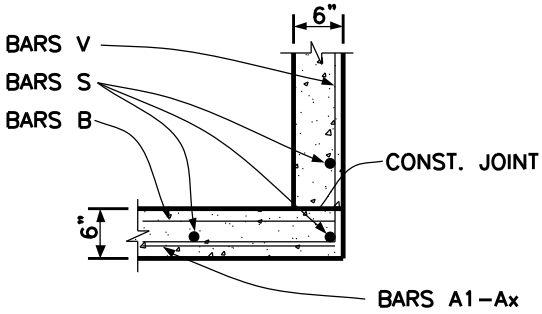

NOTES:
1. DIMENSIONS ARE FOR TYPICAL INSTALLATION.
2. SPECIFIC SITE CONDITIONS MAY REQUIRE MODIFICATION OF DIMENSIONS AND ARRANGEMENT, WITH ENGINEERING DEPT. APPROVAL.
3. ALL CONCRETE SHALL BE CLASS "C".
4. ALL HEADWALLS SHALL BE CLASS 'C' CAST-IN-PLACE CONCRETE (UNLESS AUTHORIZED BY CITY OF GARLAND).

2/3

Revision Date: 07/07

Scale : N/A Date : 02/21/05	GARLAND ENGINEERING STANDARD DETAILS	TYPE B HEADWALL (MULTIPLE)	PAGE 4
Design :			
Drawn : JMK			
Dwg. File : HDW_001.DWG			
Project No. : STANDARD-DETAILS			

TABLE OF DIMENSIONS AND QUANTITIES FOR TWO TYPE B HEADWALLS

No. OF PIPES	DIAM. OF PIPES	TABLE OF DIMENSIONS G	K	X	H	Y	W	REINFORCING STEEL AND QUANTITIES FOR TWO HEADWALLS: BARS AI – Ax #4 at 12"± No.	Av. Lgth.	Wt.	BARS B #3 at 18"± No.	Lgth.	Wt.	BARS BI – Bx #3 at 18"± No.	Av. Lgth.	Wt.	C=2'-0" #4 at 12"± No.	Wt.	BARS DI – Dx #3 at 12"± No.	Av. Lgth.	Wt.	BARS E 8–#5 Lgth.	Wt.	BARS F No.	Size	Lgth.	Wt.	BARS G 4–#3 Lgth.	Wt.	BARS S 12–#4 Lgth.	Wt.	BARS VI–Vx #4 at 12"± No.	Av. Lgth.	Wt.	BARS W 4–#5 Lgth.	Wt.	* TOTAL QUANTITIES STEEL LBS.	CONC. C.Y.
1	12"	–	12"	2'-4"	2'-0"	1'-0"	2'-4"	2	2'-8"	4	6	2'-6"	6	–	–	–	4	5	–	–	–	2'-0"	17	8	#4	2'-2"	12	2'-8"	4	8"	5	4	2'-11"	8	1'-8"	7	68	.52
2	"	10"	"	4'-2"	"	"	4'-2"	"	4'-6"	6	8	"	8	–	–	–	"	"	–	–	–	3'-10"	32	12	"	"	17	4'-6"	7	"	"	"	"	"	"	"	95	.82
3	"	"	"	6'-0"	"	"	6'-0"	"	6'-4"	8	10	"	9	–	–	–	"	"	–	–	–	5'-8"	47	16	"	"	23	6'-4"	10	"	"	"	"	"	"	"	122	1.11
4	"	"	"	7'-10"	"	"	7'-10"	"	8'-2"	11	12	"	11	–	–	–	"	"	–	–	–	7'-6"	63	20	"	"	29	8'-2"	12	"	"	"	"	"	"	"	151	1.40
1	15"	–	12"	2'-7 1/2"	2'-3"	1'-6"	3'-2 1/2"	4	3'-0"	8	6	3'-0"	7	4	1'-10"	3	8	11	–	–	–	2'-3"	19	8	#4	2'-5"	13	3'-7"	5	1'-3"	10	8	3'-0"	16	2'-3"	9	101	.75
2	"	1'-0"	"	4'-10 1/2"	"	"	5'-5 1/2"	"	5'-3"	14	8	"	9	"	"	"	"	"	–	–	–	4'-6"	38	12	"	"	19	5'-10"	9	"	"	"	"	"	"	"	138	1.16
3	"	"	"	7'-1 1/2"	"	"	7'-8 1/2"	"	7'-6"	20	10	"	11	"	"	"	"	"	–	–	–	6'-9"	56	16	"	"	26	8'-1"	12	"	"	"	"	"	"	"	174	1.57
4	"	"	"	9'-4 1/2"	"	"	9'-11 1/2"	"	9'-9"	26	14	"	16	"	"	"	"	"	–	–	–	9'-0"	75	20	"	"	32	10'-4"	16	"	"	"	"	"	"	"	214	1.98
1	18"	–	12"	2'-11"	2'-6"	2'-0"	4'-0 1/2"	4	3'-10"	10	6	3'-6"	8	4	1'-10"	3	8	11	4	1'-0"	2	2'-7"	22	8	#4	2'-8"	14	4'-5"	7	1'-10"	15	12	3'-2"	25	2'-11"	12	129	1.00
2	"	1'-2"	"	5'-7"	"	"	6'-8 1/8"	"	6'-6"	17	8	"	11	"	"	"	"	"	"	"	"	5'-3"	44	12	"	"	21	7'-11"	11	"	"	"	"	"	"	"	172	1.55
3	"	"	"	8'-3"	"	"	9'-4 7/8"	"	9'-2"	25	12	"	16	"	"	"	"	"	"	"	"	7'-11"	66	16	"	"	29	9'-9"	15	"	"	"	"	"	"	"	219	2.11
4	"	"	"	10'-11"	"	"	12'-0 7/8"	"	11'-10"	32	16	"	21	"	"	"	"	"	"	"	"	10'-7"	88	20	"	"	36	12'-5"	19	"	"	"	"	"	"	"	264	2.65
1	21"	–	12"	3'-6"	3'-0"	3'-0"	5'-9 3/4"	6	5'-0"	20	6	4'-6"	10	4	1'-10"	3	8	11	4	1'-0"	2	3'-2"	26	8	#4	3'-2"	17	6'-2"	9	3'-0"	24	16	3'-5"	37	4'-2"	17	176	1.62
2	"	1'-5"	"	6'-11"	"	"	9'-2 3/4"	"	8'-5"	34	10	"	17	"	"	"	"	"	"	"	"	6'-7"	55	12	"	"	25	9'-7"	14	"	"	"	"	"	"	"	239	2.46
3	"	"	"	10'-4"	"	"	12'-7 3/4"	"	11'-10"	47	16	"	27	"	"	"	"	"	"	"	"	9'-10"	82	16	"	"	34	13'-0"	20	"	"	"	"	"	"	"	304	3.32
4	"	"	"	13'-9"	"	"	16'-0 3/4"	"	15'-3"	61	20	"	34	"	"	"	"	"	"	"	"	13'-5"	112	20	"	"	42	16'-5"	25	"	"	"	"	"	"	"	368	4.18
1	24"	–	12"	3'-6"	3'-0"	3'-0"	5'-9 3/4"	6	5'-0"	20	6	4'-6"	10	4	1'-10"	3	8	11	4	1'-0"	2	3'-2"	26	8	#4	3'-2"	17	6'-2"	9	3'-0"	24	16	3'-5"	37	4'-2"	17	176	1.62
2	"	1'-5"	"	6'-11"	"	"	9'-2 3/4"	"	8'-5"	34	10	"	17	"	"	"	"	"	"	"	"	6'-7"	55	12	"	"	25	9'-7"	14	"	"	"	"	"	"	"	239	2.46
3	"	"	"	10'-4"	"	"	12'-7 3/4"	"	11'-10"	47	16	"	27	"	"	"	"	"	"	"	"	9'-10"	82	16	"	"	34	13'-0"	20	"	"	"	"	"	"	"	304	3.32
4	"	"	"	13'-9"	"	"	16'-0 3/4"	"	15'-3"	61	20	"	34	"	"	"	"	"	"	"	"	13'-5"	112	20	"	"	42	16'-5"	25	"	"	"	"	"	"	"	368	4.18
1	30"	–	12"	4'-1"	3'-6"	4'-0"	7'-6 5/8"	8	6'-2"	33	6	5'-6"	12	8	3'-1"	9	12	16	8	2'-2"	7	3'-9"	31	8	#4	3'-8"	20	7'-11"	12	4'-2"	33	20	3'-8"	49	5'-5"	23	245	2.34
2	"	1'-8"	"	8'-3"	"	"	11'-8 5/8"	"	10'-4"	55	12	"	25	"	"	"	"	"	"	"	"	7'-11"	66	16	"	"	39	12'-1"	18	"	"	"	"	"	"	"	340	3.58
3	"	"	"	12'-5"	"	"	15'-10 5/8"	"	14'-6"	77	18	"	37	"	"	"	"	"	"	"	"	12'-1"	101	24	"	"	59	16'-3"	24	"	"	"	"	"	"	"	435	4.80
4	"	"	"	16'-7"	"	"	20'-0 5/8"	"	18'-8"	100	24	"	50	"	"	"	"	"	"	"	"	16'-3"	136	32	"	"	78	20'-5"	31	"	"	"	"	"	"	"	532	6.04
1	36"	–	12"	4'-8"	4'-0"	5'-0"	9'-3 1/2"	10	7'-4"	49	8	6'-6"	20	8	3'-1"	9	12	16	8	2'-2"	7	4'-4"	36	8	#4	4'-2"	22	9'-8"	15	5'-4"	43	24	3'-11"	63	6'-8"	28	308	3.23
2	"	1'-11"	"	9'-7"	"	"	14'-2 1/2"	"	12'-3"	82	14	"	34	"	"	"	"	"	"	"	"	9'-3"	77	16	"	"	45	14'-7"	22	"	"	"	"	"	"	"	426	4.89
3	"	"	"	14'-6"	"	"	19'-1 1/2"	"	17'-2"	115	20	"	49	"	"	"	"	"	"	"	"	14'-2"	118	24	"	"	67	19'-6"	29	"	"	"	"	"	"	"	544	6.55
4	"	"	"	19'-5"	"	"	24'-0 1/2"	"	22'-1"	147	28	"	68	"	"	"	"	"	"	"	"	19'-1"	159	32	"	"	89	24'-5"	37	"	"	"	"	"	"	"	666	8.22
1	42"	–	12"	5'-3"	4'-6"	6'-0"	11'-0 1/4"	12	8'-6"	68	8	7'-6"	23	12	4'-5"	20	16	21	12	3'-3"	15	4'-11"	41	8	#4	4'-8"	25	11'-5"	17	6'-5"	51	28	4'-2"	78	7'-11"	33	392	4.23
2	"	2'-2"	"	10'-11"	"	"	16'-8 1/4"	"	14'-2"	114	16	"	45	"	"	"	"	"	"	"	"	10'-7"	88	16	"	"	50	17'-1"	26	"	"	"	"	"	"	"	541	6.40
3	"	"	"	16'-7"	"	"	22'-4 1/4"	"	19'-10"	159	24	"	68	"	"	"	"	"	"	"	"	16'-3"	136	24	"	"	75	22'-9"	34	"	"	"	"	"	"	"	690	8.56
4	"	"	"	22'-3"	"	"	28'-0 1/4"	"	25'-6"	204	32	"	90	"	"	"	"	"	"	"	"	21'-11"	183	32	"	"	100	28'-5"	43	"	"	"	"	"	"	"	838	10.74
1	48"	–	15"	5'-10"	5'-3"	7'-0"	12'-9 1/8"	14	9'-8"	90	10	8'-6"	32	12	4'-5"	20	16	21	12	3'-4"	15	5'-6"	46	8	#5	5'-5"	45	13'-2"	20	7'-7"	61	32	4'-5"	94	9'-3"	39	483	5.43
2	"	2'-5"	"	12'-3"	"	"	19'-2 1/8"	"	16'-1"	150	18	"	58	"	"	"	"	"	"	"	"	11'-11"	99	16	"	"	90	19'-7"	29	"	"	"	"	"	"	"	676	8.25
3	"	"	"	18'-8"	"	"	25'-7 1/8"	"	22'-6"	210	26	"	83	"	"	"	"	"	"	"	"	18'-4"	153	24	"	"	136	26'-0"	39	"	"	"	"	"	"	"	871	11.07
4	"	"	"	25'-1"	"	"	32'-0 1/8"	"	28'-11"	270	36	"	115	"	"	"	"	"	"	"	"	24'-9"	207	32	"	"	181	32'-5"	49	"	"	"	"	"	"	"	1072	13.89
1	54"	–	15"	6'-5"	5'-9"	8'-0"	14'-6"	16	10'-10"	116	10	9'-6"	36	12	4'-5"	20	20	27	16	4'-5"	27	6'-1"	51	8	#5	5'-11"	49	14'-10"	22	8'-9"	70	40	4'-8"	125	10'-5"	43	586	6.71
2	"	2'-10"	"	13'-9"	"	"	21'-10"	"	18'-2"	194	20	"	71	"	"	"	"	"	"	"	"	13'-5"	112	20	"	"	123	22'-2"	33	"	"	"	"	"	"	"	845	10.28
3	"	"	"	21'-1"	"	"	29'-2"	"	25'-6"	273	30	"	107	"	"	"	"	"	"	"	"	20'-9"	173	32	"	"	198	29'-6"	44	"	"	"	"	"	"	"	1107	13.84
4	"	"	"	28'-5"	"	"	36'-6"	"	32'-10"	351	40	"	143	"	"	"	"	"	"	"	"	28'-1"	234	44	"	"	272	36'-10"	55	"	"	"	"	"	"	"	1367	17.42
1	60"	–	15"	7'-0"	6'-3"	9'-0"	16'-2 7/8"	18	12'-0"	144	10	10'-6"	39	16	5'-9"	35	20	27	16	4'-5"	27	6'-8"	56	8	#5	6'-5"	54	16'-7"	25	9'-11"	80	44	4'-11"	145	11'-8"	49	681	8.11
2	"	3'-0"	"	15'-0"	"	"	24'-2 7/8"	"	20'-0"	240	22	"	87	"	"	"	"	"	"	"	"	14'-8"	122	20	"	"	134	25'-7"	38	"	"	"	"	"	"	"	984	12.34
3	"	"	"	23'-0"	"	"	32'-2 7/8"	"	28'-0"	337	32	"	126	"	"	"	"	"	"	"	"	22'-8"	189	32	"	"	214	32'-7"	49	"	"	"	"	"	"	"	1278	16.57
4	"	"	"	31'-0"	"	"	40'-2 7/8"	"	36'-5"	438	44	"	174	"	"	"	"	"	"	"	"	30'-8"	256	44	"	"	295	40'-8"	61	"	"	"	"	"	"	"	1587	20.82
1	66"	–	15"	7'-7"	6'-9"	10'-0"	17'-11 3/4"	20	13'-2"	176	12	11'-6"	52	16	5'-9"	35	24	32	20	5'-7"	42	7'-3"	60	8	#5	6'-11"	58	18'-4"	28	11'-1"	89	48	5'-2"	166	13'-0"	54	792	9.65
2	"	3'-1"	"	16'-2"	"	"	26'-6 3/4"	"	21'-9"	291	24	"	104	"	"	"	"	"	"	"	"	15'-10"	32	20	"	"	144	26'-11"	40	"	"	"	"	"	"	"	1129	14.54
3	"	"	"	24'-9"	"	"	35'-1 3/4"	"	30'-4"	405	34	"	147	"	"	"	"	"	"	"	"	24'-5"	204	32	"	"	231	35'-6"	53	"	"	"	"	"	"	"	1458	19.42
4	"	"	"	33'-4"	"	"	43'-8 3/4"	"	39'-8"	530	46	"	199	"	"	"	"	"	"	"	"	33'-0"	275	44	"	"	318	44'-2"	67	"	"	"	"	"	"	"	1807	24.31
1	72"	–	15"	8'-2"	7'-3"	11'-0"	19'-8 5/8"	22	14'-4"	211	12	12'-6"	56	16	5'-9"	35	24	32	20	5'-7"	42	7'-10"	65	8	#5	7'-5"	62	20'-1"	30	12'-3"	98	52	5'-5"	188	14'-3"	59	878	11.32
2	"	3'-2"	"	17'-4"	"	"	28'-10 5/8"	"	23'-6"	345	24	"	113	"	"	"	"	"	"	"	"	17'-0"	142	20	"	"	155	29'-3"	44	"	"	"	"	"	"	"	1253	16.91
3	"	"	"	26'-6"	"	"	38'-0 5/8"	"	32'-10"	482	38	"	179	"	"	"	"	"	"	"	"	26'-2"	218	32	"	"	248	38'-5"	58	"	"	"	"	"	"	"	1639	22.52
4	"	"	"	35'-8"	"	"	47'-2 5/8"	"	41'-10"	615	50	"	235	"	"	"	"	"	"	"	"	35'-4"	295	44	"	"	341	47'-8"	72	"	"	"	"	"	"	"	2017	28.11

Revision Date:

Scale : N/A Date : 02/21/05

Design :

Drawn : JMK

Dwg. File : HDW_001.DWG

Project No. : STANDARD–DETAILS

GARLAND ENGINEERING

STANDARD DETAILS

TYPE B HEADWALLS DIMENSIONS AND QUANTITIES TABLE

3/3

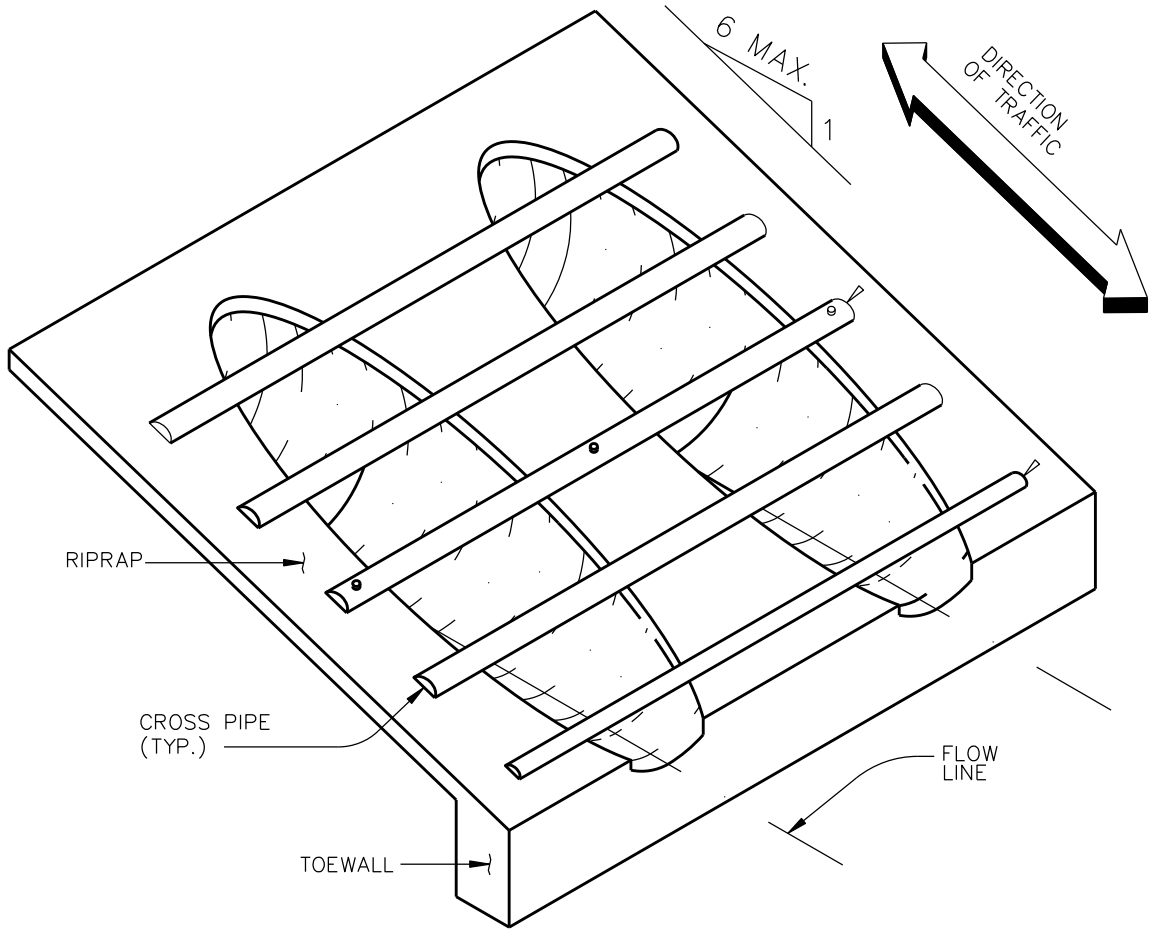

ISOMETRIC VIEW OF TYPICAL INSTALLATION

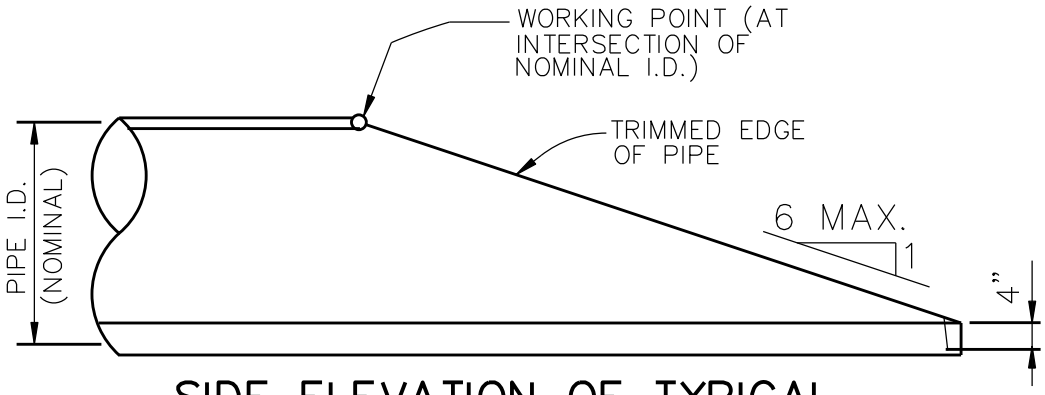

SIDE ELEVATION OF TYPICAL PIPE CULVERT MITER

NOTES:
1. All Cross Pipes, calculations, and dimension are based on the pipe culverts mitered as shown in this detail. Alternate styles of mitered ends will require that appropriate adjustments be made to the values presented on this standard.
2. The third Cross Pipe from the bottom of the Culvert shall always be installed using a bolted connection. Care shall be taken to ensure that Riprap concrete does not flow into the Cross Pipe so as to permit disassembly of the bolted connection to allow cleanout access. At the Contractor's option, all other Cross Pipes may also be istalled using the bolted connection details.

1/8

Revision Date:

Scale : N/A Date : 06/01/05	GARLAND ENGINEERING STANDARD DETAILS	PIPE CULVERT PARALLEL DRAINAGE	PAGE 6
Design :			
Drawn : SEL			
Dwg. File : HDW_002.DWG			
Project No. : STANDARD-DETAILS			

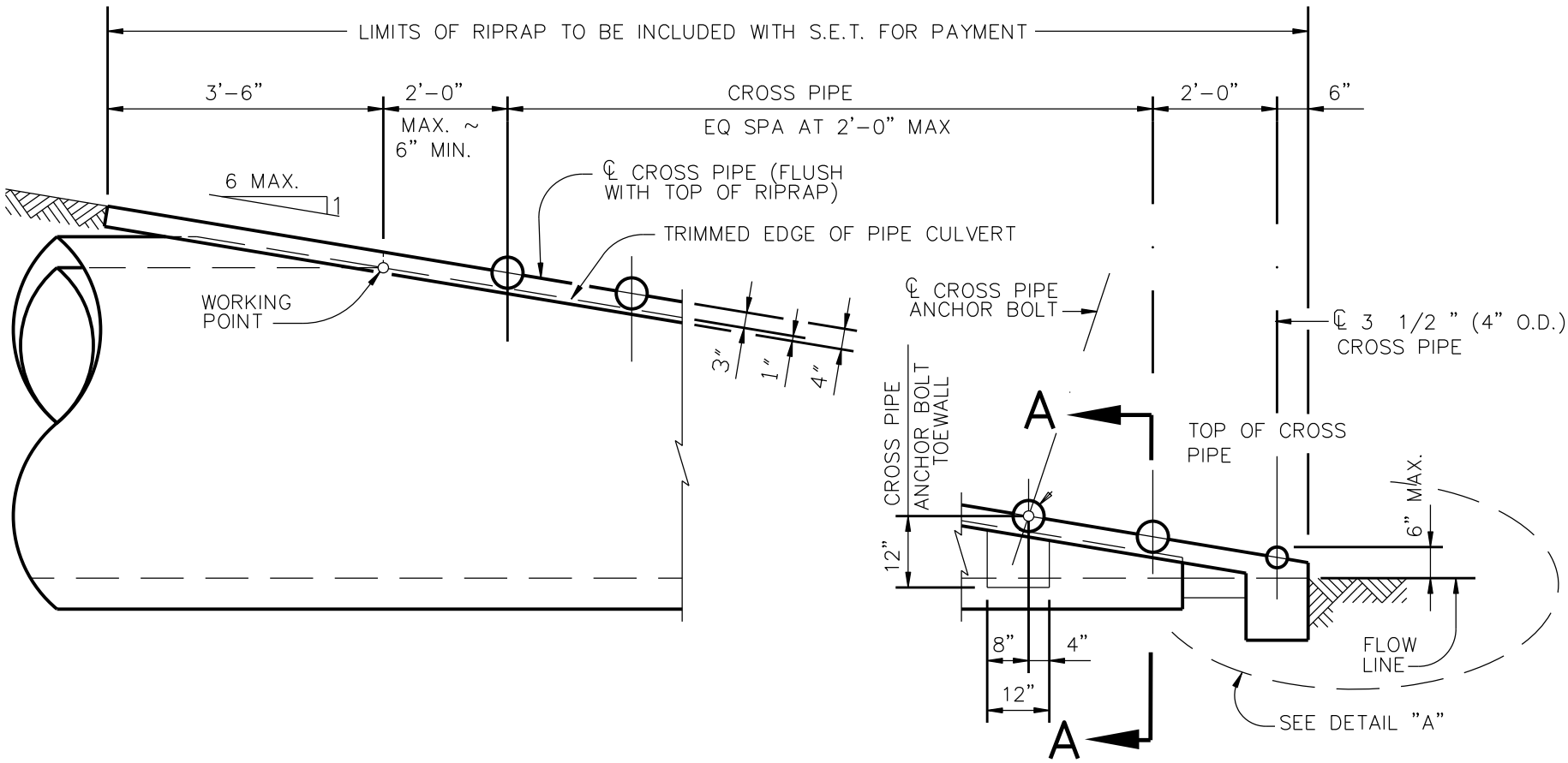

SIDE ELEVATION OF CAST-IN-PLACE CONCRETE

NOTES:

1. All Cross Pipes, calculations, and dimension are based on the pipe culverts mitered as shown in this detail. Alternate styles of mitered ends will require that appropriate adjustments be made to the values presented on this standard.
2. The third Cross Pipe from the bottom of the Culvert shall always be installed using a bolted connection. Care shall be taken to ensure that Riprap concrete does not flow into the Cross Pipe so as to permit disassembly of the bolted connection to allow cleanout access. At the Contractor's option, all other Cross Pipes may also be istalled using the bolted connection details.

Revision Date:

Scale : N/A Date : 06/01/05
Design :
Drawn : SEL
Dwg. File : HDW_002.DWG
Project No. : STANDARD-DETAILS

GARLAND ENGINEERING
STANDARD DETAILS

PIPE CULVERT PARALLEL DRAINAGE

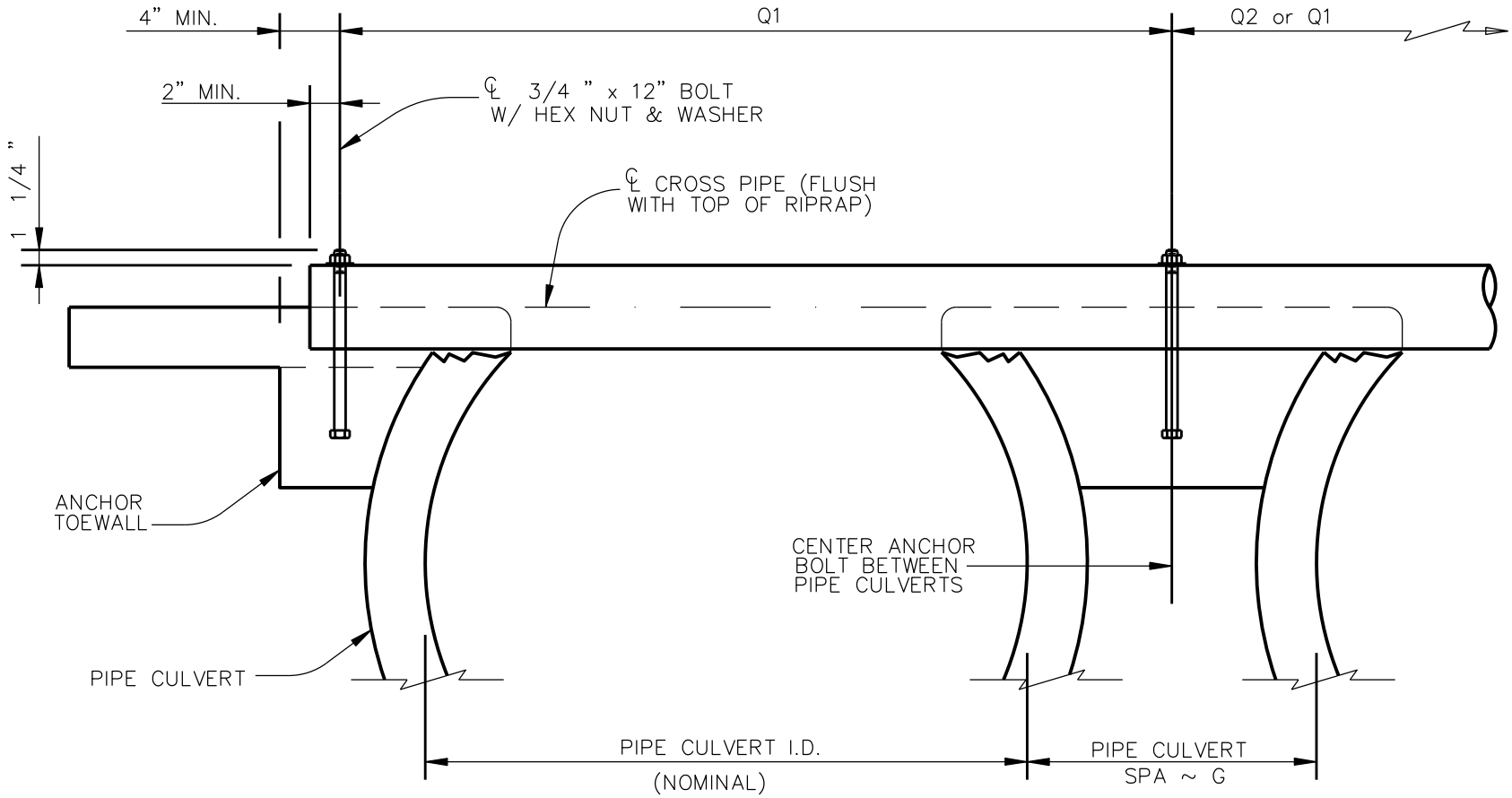

SHOWING CROSS PIPE WITH BOLTED ANCHOR

SECTION A–A

NOTES:

1. All Cross Pipes, calculations, and dimension are based on the pipe culverts mitered as shown in this detail. Alternate styles of mitered ends will require that appropriate adjustments be made to the values presented on this standard.
2. The third Cross Pipe from the bottom of the Culvert shall always be installed using a bolted connection. Care shall be taken to ensure that Riprap concrete does not flow into the Cross Pipe so as to permit disassembly of the bolted connection to allow cleanout access. At the Contractor's option, all other Cross Pipes may also be istalled using the bolted connection details.

Revision Date:

Scale : N/A Date : 06/01/05
Design :
Drawn : SEL
Dwg. File : HDW_002.DWG
Project No. : STANDARD-DETAILS

GARLAND ENGINEERING
STANDARD DETAILS

PIPE CULVERT
PARALLEL DRAINAGE

3/8

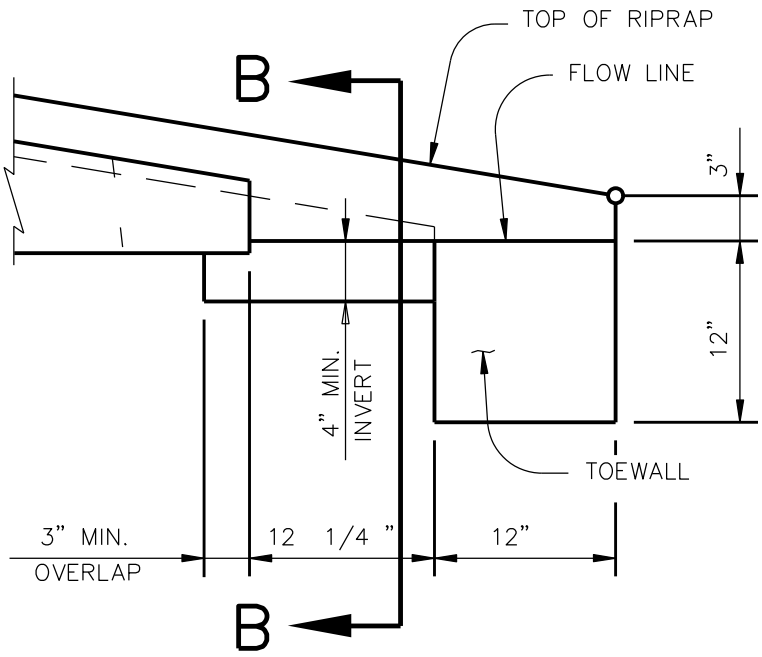

DETAIL "A"

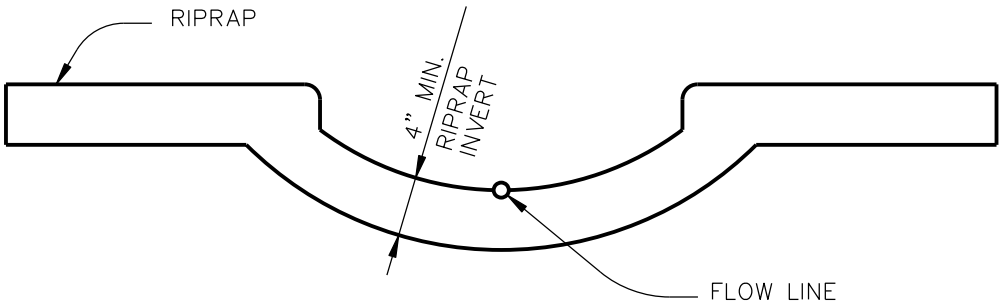

SECTION B–B

(Cross Pipes not shown for clarity.)

4
8

Revision Date:

Scale : N/A Date : 06/01/05	GARLAND ENGINEERING STANDARD DETAILS	PIPE CULVERT PARALLEL DRAINAGE
Design :		
Drawn : SEL		
Dwg. File : HDW_002.DWG		
Project No. : STANDARD–DETAILS		

PAGE 9

LIMITS OF RIPRAP
TO BE INCLUDED
WITH S.E.T. FOR
PAYMENT

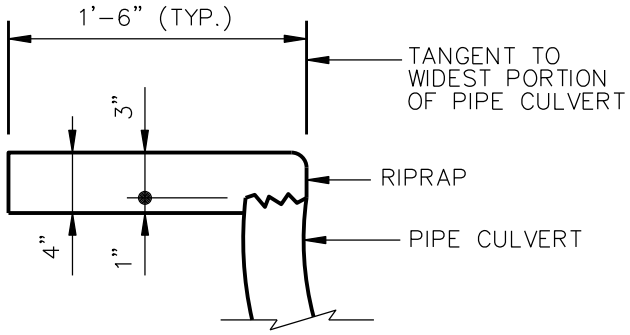

SHOWING TYPICAL PIPE CULVERT & RIPRAP

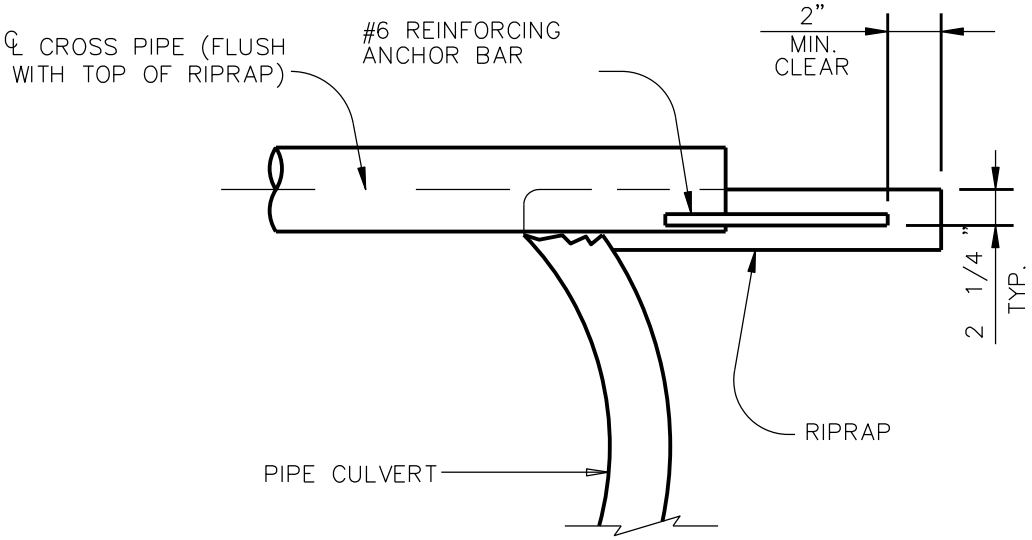

SHOWING CROSS PIPE WITH ANCHOR BAR

5/8

Revision Date:

Scale : N/A Date : 06/01/05	GARLAND ENGINEERING STANDARD DETAILS	PIPE CULVERT PARALLEL DRAINAGE
Design :		
Drawn : SEL		
Dwg. File : HDW_002.DWG		
Project No. : STANDARD-DETAILS		

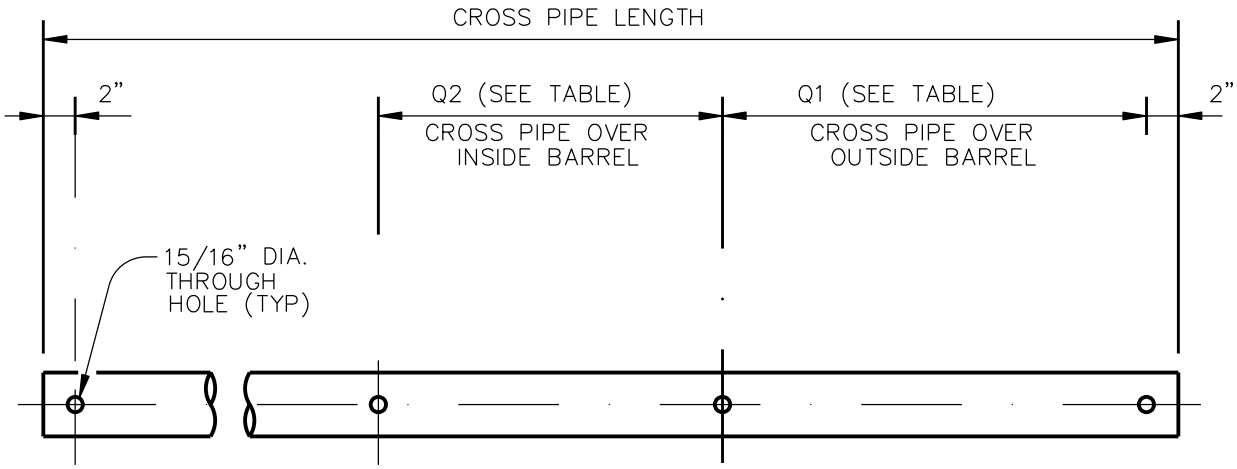

PIPE W/ BOLTED ANCHOR

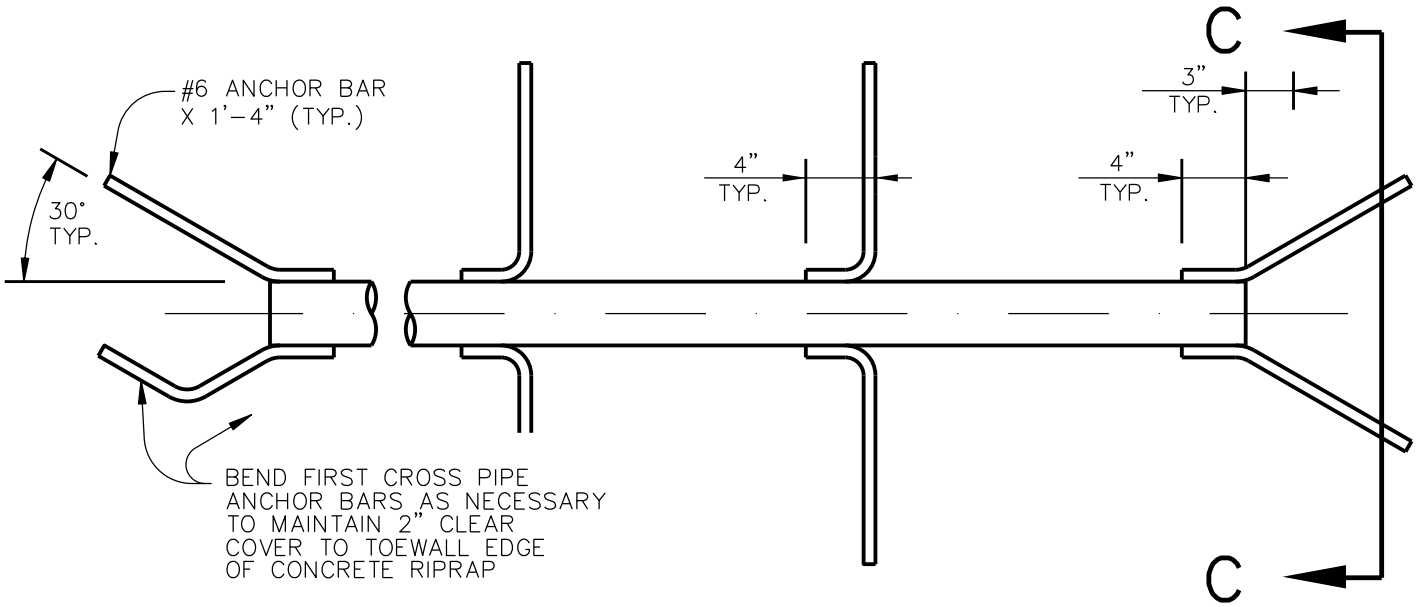

PIPE W/ ANCHOR BARS

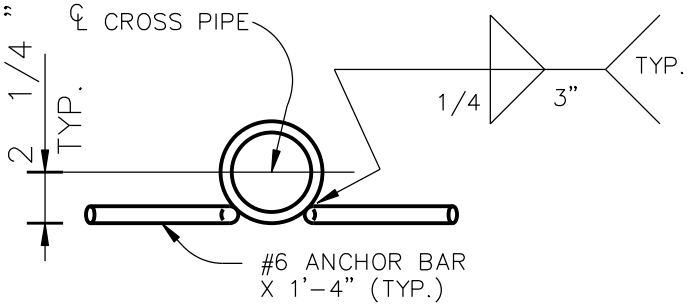

SECTION C-C
CROSS PIPE DETAILS

6
8

Revision Date:

Scale : N/A Date : 06/01/05	GARLAND ENGINEERING STANDARD DETAILS	PIPE CULVERT PARALLEL DRAINAGE	PAGE 11
Design :			
Drawn : SEL			
Dwg. File : HDW_002.DWG			
Project No. : STANDARD-DETAILS			

CROSS PIPE LENGTHS, REQUIRED PIPE SIZES, & RIPRAP QUANTITIES

Nominal Culvert I.D.	Conc Riprap (CY)	Pipe Culvert Spa ~ G	Single Barrel ~ Q1	Multi-Barrel ~ Q1	Q2	Conditions for use of Cross Pipes	Cross Pipe Size
12"	0.6	9"	N/A	2'- 1"	1'- 9"	3 or more Pipe Culverts	3" Std (3.500" O.D.)
15"	0.7	11"	N/A	2'- 5"	2'- 2"		
18"	0.8	1'- 2"	N/A	2'-10"	2'- 8"		
21"	0.9	1'- 4"	N/A	3'- 2"	3'- 1"		
24"	0.9	1'- 7"	N/A	3'- 6"	3'- 7"		
27"	1.0	1'- 8"	N/A	3'-10"	3'-11"	3 or more Pipe Culverts	3 1/2 " Std (4.000" O.D.)
30"	1.1	1'-10"	N/A	4'- 2"	4'- 4"	2 or more Pipe Culverts	
33"	1.2	1'-11"	4'- 2"	4'- 5"	4'- 8"	All Pipe Culverts	
36"	1.3	2'- 1"	4'- 5"	4'- 9"	5'- 1"	All Pipe Culverts	4" Std (4.500" O.D.)
42"	1.5	2'- 4"	4'-11"	5'- 5"	5'-10"		
48"	1.7	2'- 7"	5'- 5"	6'- 0"	6'- 7"	All Pipe Culverts	5" Std (5.563" O.D.)
54"	2.0	3'- 0"	5'-11"	6'- 9"	7'- 6"		
60"	2.2	3'- 3"	6'- 5"	7'- 4"	8'- 3"		
66"	2.4	3'- 3"	6'-11"	7'-10"	8'- 9"		
72"	2.7	3'- 4"	7'- 5"	8'- 5"	9'- 4"		

NOTES:

1. Concrete riprap quantities are for one end of a single pipe culvert.
2. Payment for riprap & toe wall is subsidiary to the unit bid price for safety and treatment.
3. Cross pipes shall conform to ASTM A500, grade B.
4. Bolts and Nuts shall conform to ASTM A307.
5. All exposed steel components shall be hot dip galvanized and approved for use.

Revision Date:

7/8

Scale : N/A Date : 06/01/05
Design :
Drawn : SEL
Dwg. File : HDW_002.DWG
Project No. : STANDARD-DETAILS

GARLAND ENGINEERING
STANDARD DETAILS

PIPE CULVERT
PARALLEL DRAINAGE

GENERAL NOTES:

1. All Cross Pipe Headwalls shall be Class 'C' Cast-In-Place Concrete (unless authorized by City of Garland).

2. Cross Pipes shall conform to the requirements of ASTM A53 (Type E or S, Grade B), ASTM A500 (Grade B), or API 5LX52. of Item 432, "Riprap".

3. Bolts and nuts shall conform to ASTM A307.

4. All steel components, except concrete reinforcing, shall be galvanized after fabrication. Galvanizing damaged during transport or construction shall be repaired in accordance with the specifications.

8
8

Revision Date: 07/07

Scale : N/A Date : 06/01/05	GARLAND ENGINEERING STANDARD DETAILS	PIPE CULVERT GENERAL NOTES	PAGE 13
Design :			
Drawn : COG			
Dwg. File : HDW_002.DWG			
Project No. : STANDARD-DETAILS			