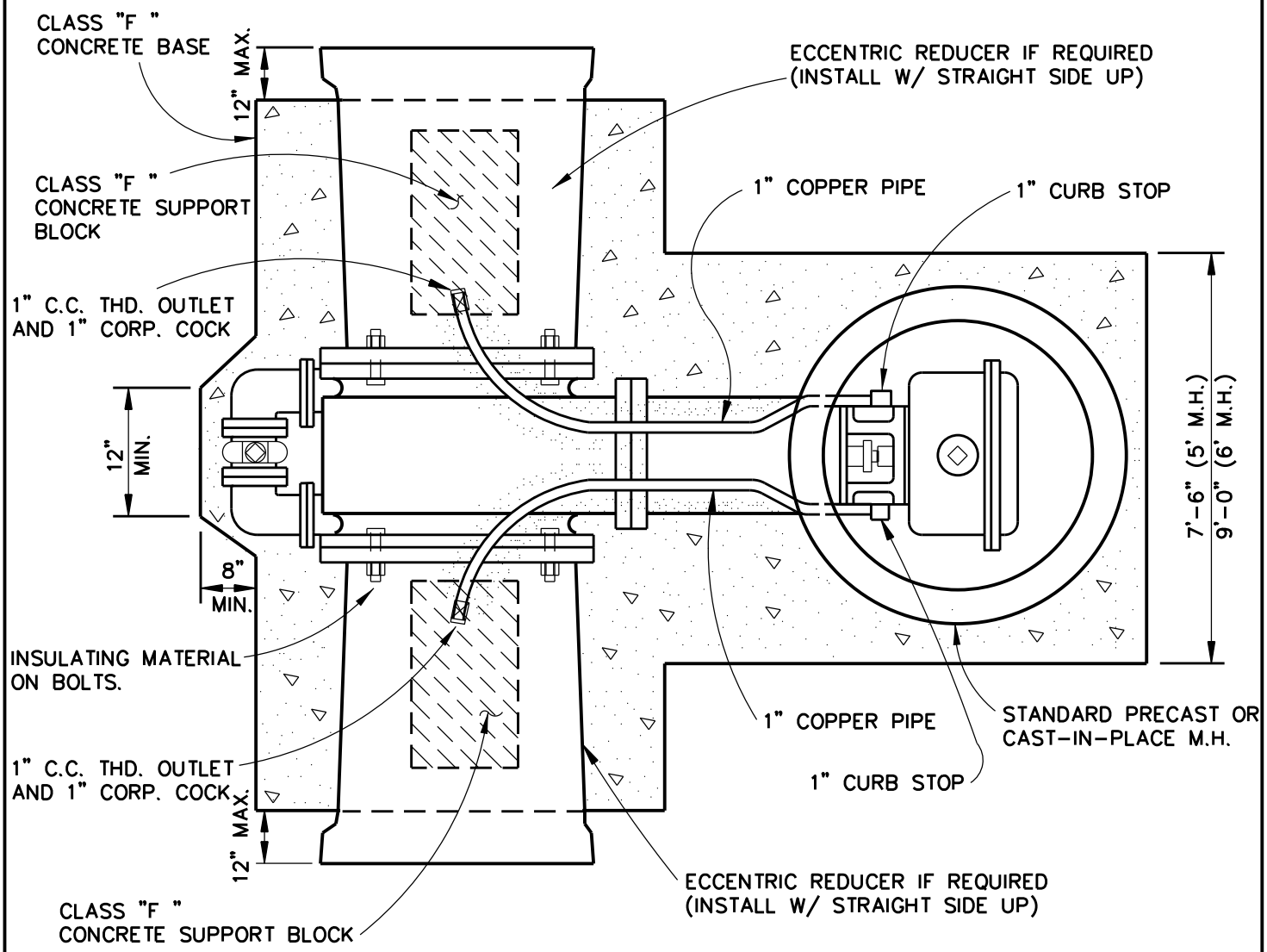

PLAN

N.T.S.

1/4

Revision Date:

Scale : N/A Date : 06/01/05	GARLAND ENGINEERING STANDARD DETAILS	VAULT CONSTRUCTION HORIZONTAL GATE VALVE ≥ 16"	PAGE 1
Design :			
Drawn : GAV			
Dwg. File : VAL_001.DWG			
Project No. : STANDARD-DETAILS			

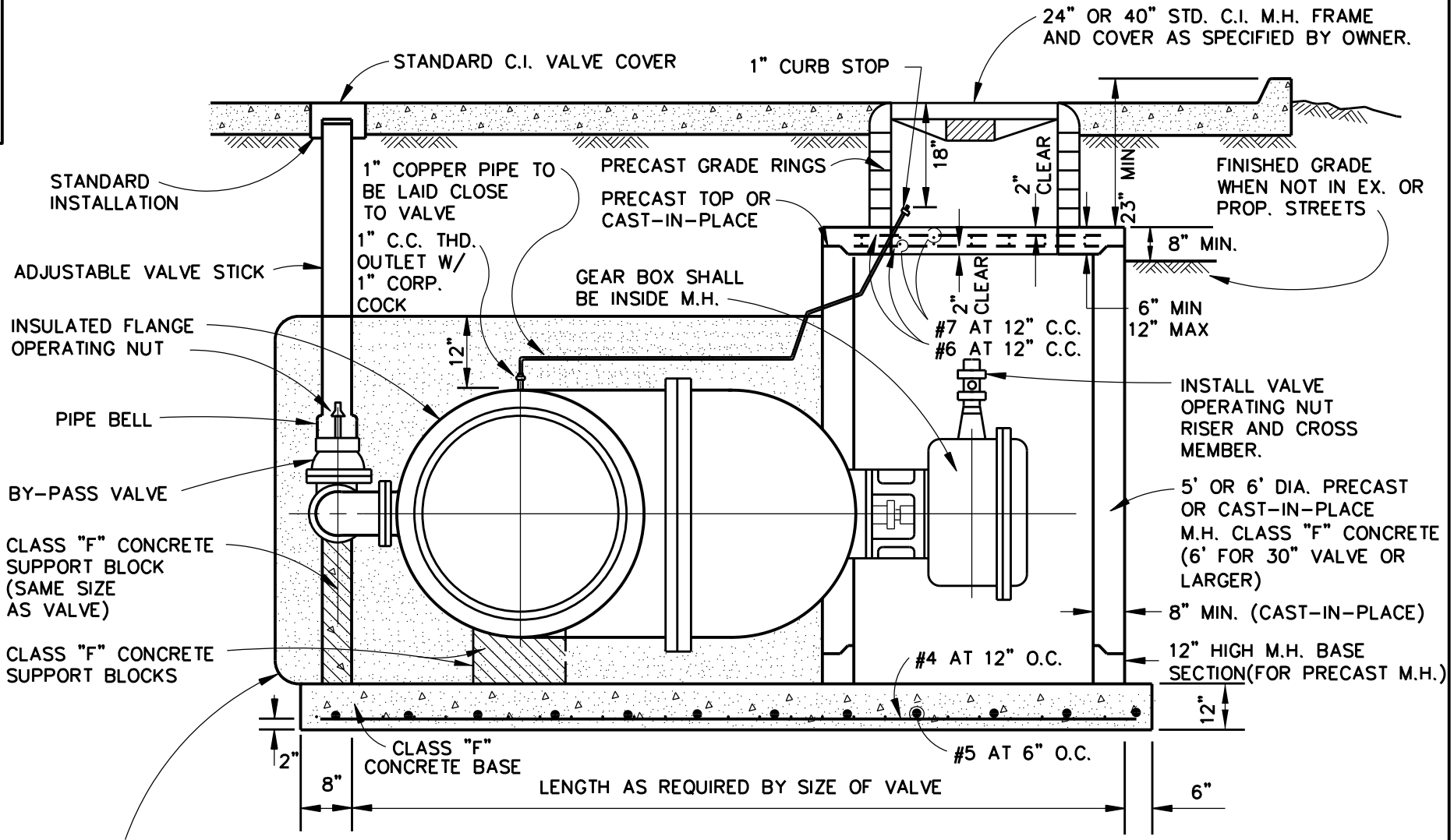

PROFILE

N.T.S.

Revision Date:

Scale : N/A Date : 06/01/05
Design :
Drawn : GAV
Dwg. File : VAL_002.DWG
Project No. : STANDARD-DETAILS

GARLAND ENGINEERING

STANDARD DETAILS

VAULT CONSTRUCTION HORIZONTAL GATE VALVE ≥ 16"

PAGE 2

2/4

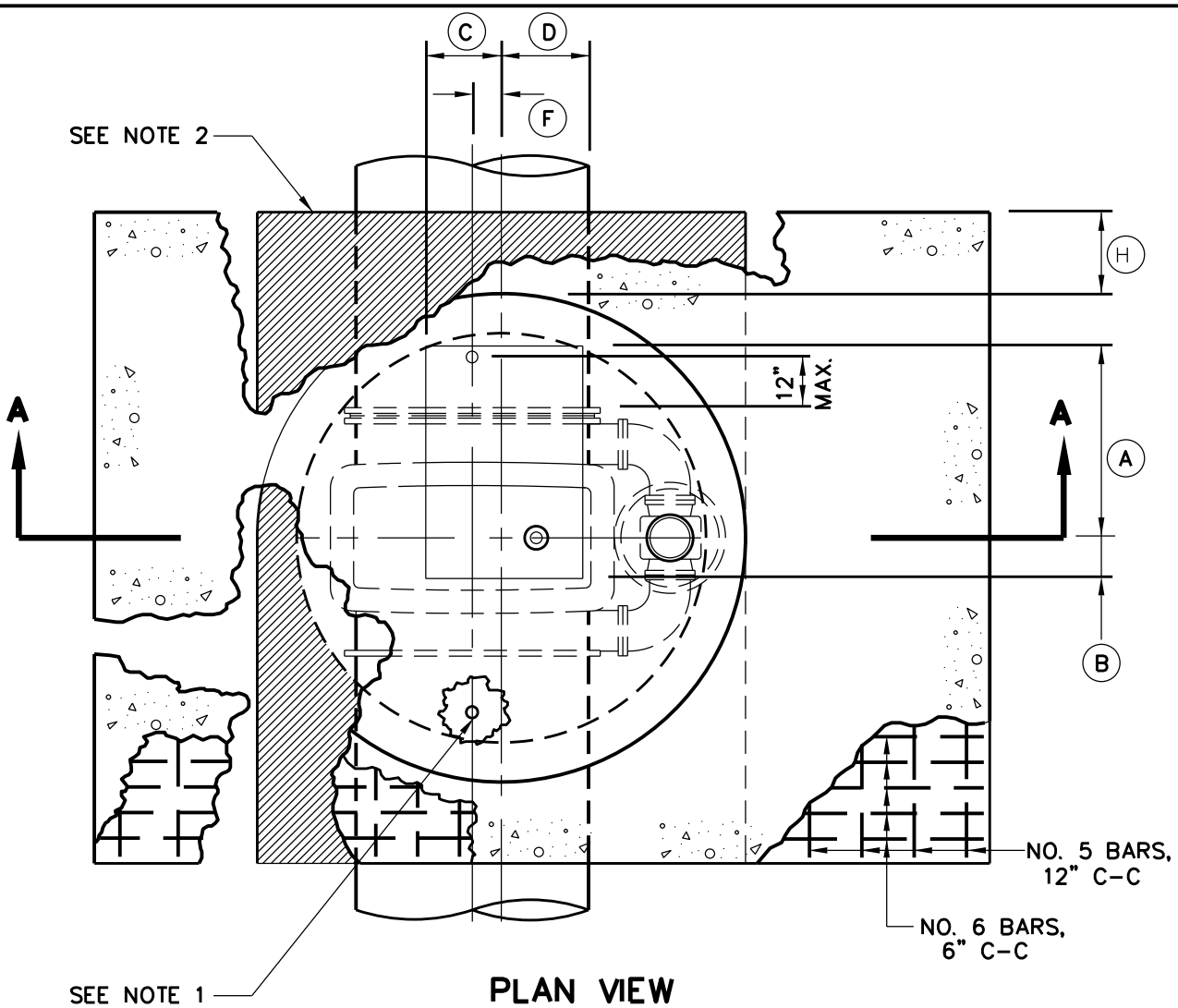

PLAN VIEW

(LESS MANHOLE FRAME & COVER INSTALLATION)
N.T.S.

GATE VALVE SIZE	DIMENSION TABLE											
	A	B	C	D	E	F	G	H	J	K	L	M
16"	20"	20"	12"	12"	44 1/2"	1"	48"	12"	10"	24"	12"	16"
18"	20"	20"	12"	12"	51 3/8"	2"	48"	12"	12"	24"	12"	18"
20"	22"	18"	12"	12"	56 5/8"	1"	54"	12"	12"	24"	16"	20"
24"	26"	14"	12"	12"	64 3/8"	1"	60"	18"	14"	30"	18"	24"
30"	28"	12"	12"	12"	80 5/8"	3"	66"	18"	18"	30"	20"	30"
36"	32"	8"	12"	12"	90 1/16"	4"	72"	18"	18"	36"	24"	36"
42"	34"	6"	15"	9"	107 3/4"	5"	78"	24"	20"	36"	30"	42"
48"	36"	4"	14"	10"	121 5/8"	4"	90"	24"	26"	42"	36"	48"
54"	36"	4"	9"	15"	142 1/2"	3"	102"	24"	32"	46"	40"	54"

NOTES:

1. PROVIDE CORPORATION AND CURB STOPS A MAXIMUM OF 12" FROM EACH END OF GATE VALVE, AS SHOWN. CORPORATION AND CURB STOP SIZES SHALL BE 1" FOR 16", 20", AND 24" NOMINAL PIPE DIAMETERS; 2" FOR 30" AND LARGER DIAMETERS. 2" TAPS SHALL BE MADE AS A 2" FLANGED OUTLET WITH INSULATED ADAPTOR KIT. COPPER RISERS SHALL BE PROVIDED BETWEEN THE CORPORATION AND CURB STOPS. CURB STOPS SHALL BE INSTALLED AT AN ELEVATION 12" ABOVE THE TOP SURFACE OF VAULT BOTTOM SLAB.
2. POLYURETHANE CUSHION PAD.

3/4

Revision Date:

Scale : N/A Date : 06/01/05	GARLAND ENGINEERING STANDARD DETAILS	VAULT CONSTRUCTION VERTICAL GATE VALVE >_16"	PAGE 3
Design :			
Drawn : GAV			
Dwg. File : VAL_003.DWG			
Project No. : STANDARD-DETAILS			

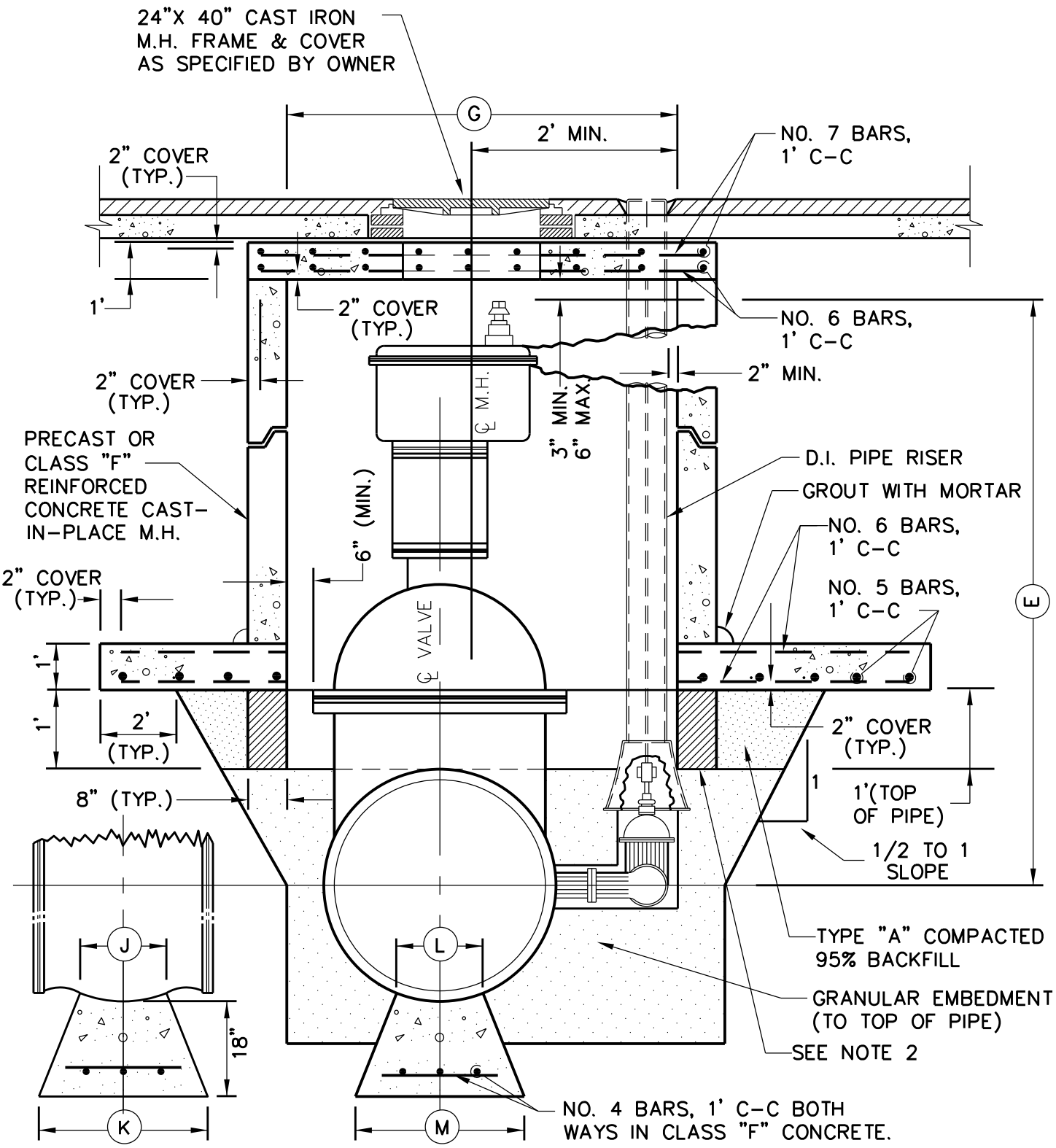

SECTION "A-A"

REFER TO STD. DWG. VAL_003 PAGE 3 FOR DIMENSION TABLE AND GENERAL NOTES.

4/4

Revision Date:

Scale : N/A Date : 06/01/05	GARLAND ENGINEERING STANDARD DETAILS	VAULT CONSTRUCTION VERTICAL GATE VALVE >_16"	PAGE 4
Design :			
Drawn : GAV			
Dwg. File : VAL_003.DWG			
Project No. : STANDARD-DETAILS			

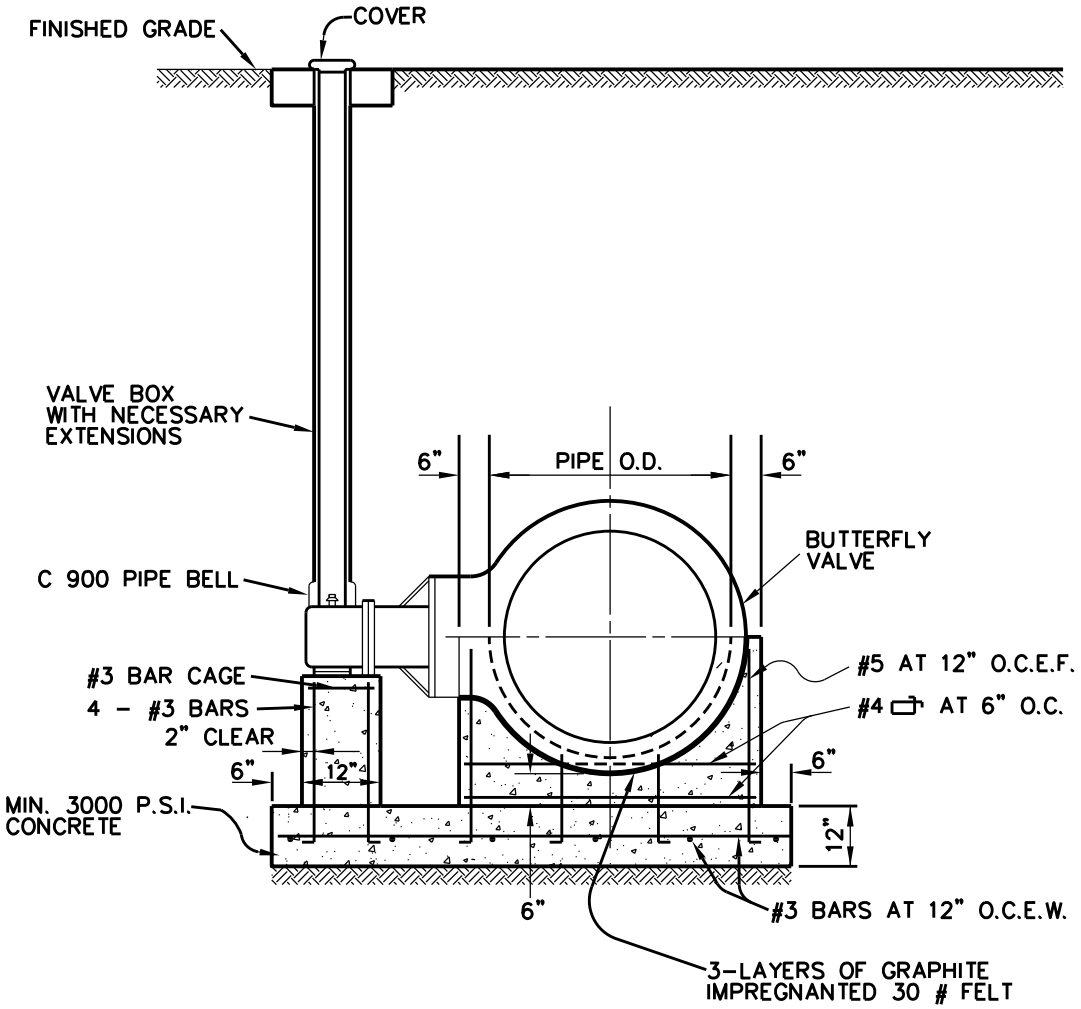

SECTION VIEW

NTS

NOTE:
CUT A "V" SHAPED SYMBOL ON THE NEAREST CURB FACE WITH THE POINT OF THE "V" SYMBOL POINTING TOWARDS THE VALVE LOCATION.

1
1

Revision Date:

Scale : N/A Date : 06/01/05	GARLAND ENGINEERING STANDARD DETAILS	TYPICAL BUTTERFLY VALVE INSTALLATION ≥ 16"	PAGE 5
Design :			
Drawn : JMK			
Dwg. File : VAL_004.DWG			
Project No. : STANDARD-DETAILS			

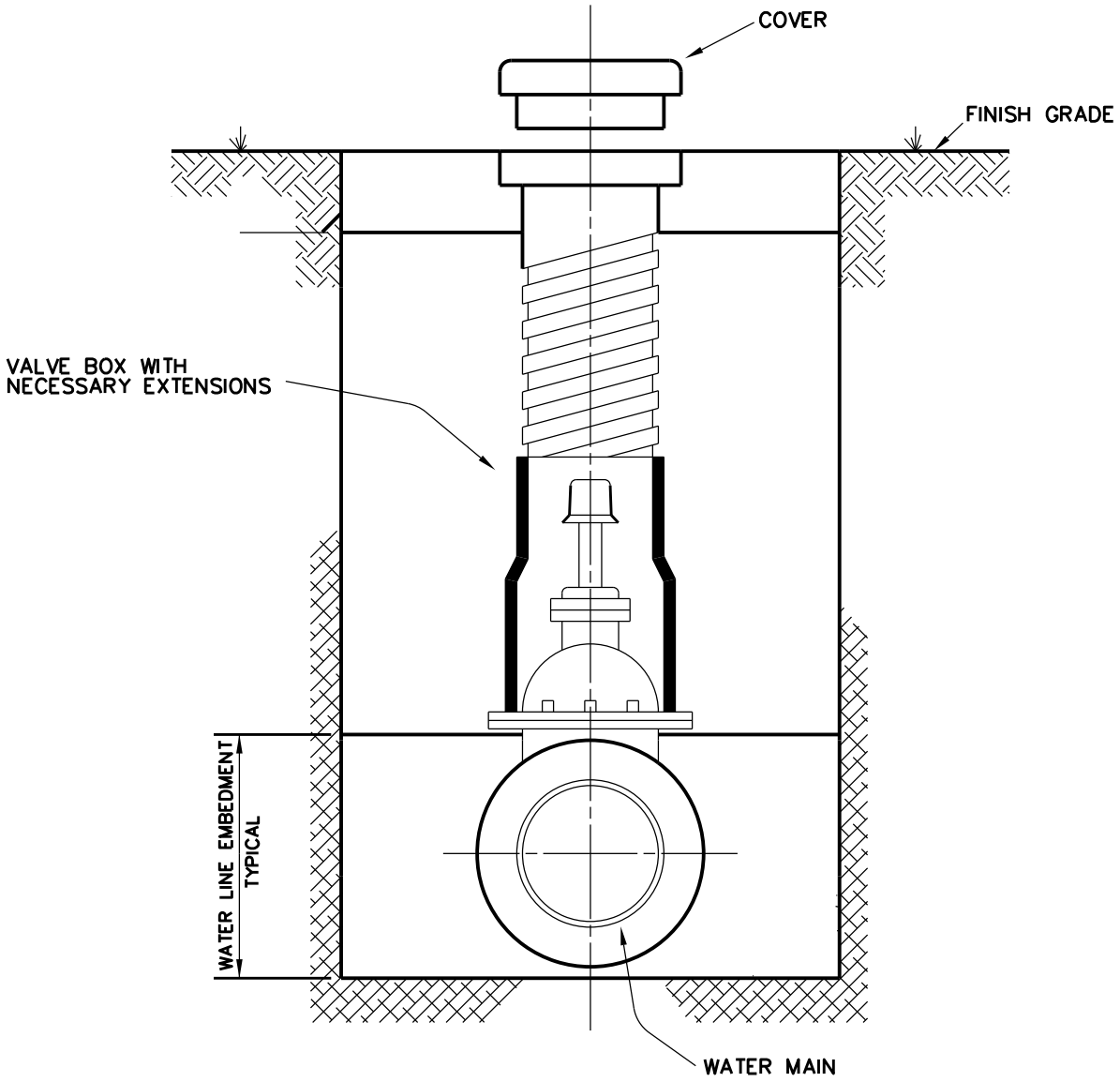

NOTE:

1. RESILIENT SEAT VALVES 4" THRU 12" IN SIZE SHALL BE IN ACCORDANCE WITH AWWA STANDARD C-509.
2. C-900 PVC PIPE BELL SECTION SHALL BE USED FOR VALVE STACKS WITH ADJUSTABLE VALVE BOXES.
3. CUT A "V" SHAPED SYMBOL ON THE NEAREST CURB FACE WITH THE POINT OF THE "V" SYMBOL POINTING TOWARDS THE VALVE LOCATION.

TYPICAL VALVE SETTING AND BOX

NTS

1/1

Revision Date:

Scale : N/A Date : 06/01/05	GARLAND ENGINEERING STANDARD DETAILS	TYPICAL GATE VALVE INSTALLATION	PAGE 6
Design :			
Drawn : JMK			
Dwg. File : VAL_005.DWG			
Project No. : STANDARD-DETAILS			

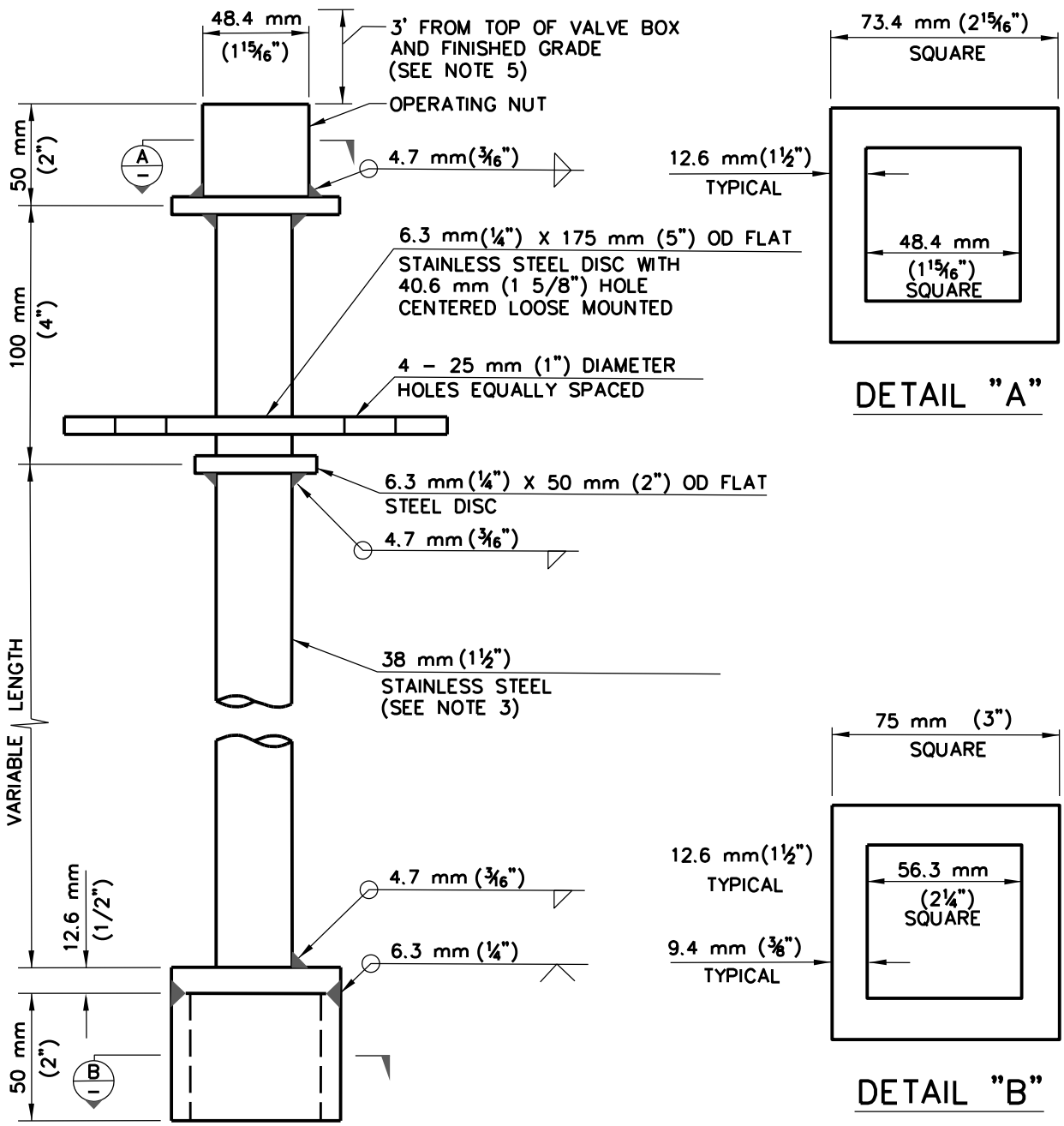

NOTES:

1. STEEL EXTENSION STEMS SHALL BE USED ONLY WHERE THE MAXIMUM LENGTH OF THE EXTENSION EXCEEDS 2.4 m (7') AND AT THE REQUEST OF THE DISTRICT ENGINEER.
2. EXTENSION STEMS SHALL BE ROUND OR SQUARE STEEL TUBING OF SOLID DESIGN (NO PINNED COUPLINGS PERMITTED).
3. VALVES DEEPER THAN 2.4 m (7') REQUIRE A VALVE STEM EXTENSION.
4. EXTENSION STEMS SHALL NOT BE ATTACHED/BOLTED TO OPERATING NUT OF THE VALVE.
5. TOP OF THE EXTENDED OPERATING NUT SHOULD BE NO HIGHER THAN 3' FROM TOP OF VALVE BOX (FINISHED GRADE).

1/1

Revision Date:			
Scale : N/A Date : 12/05/11	GARLAND ENGINEERING STANDARD DETAILS	STEEL VALVE STEM EXTENSION	PAGE 7
Design :			
Drawn : GAV			
Dwg. File : VAL_EXT.DGN			
Project No. : STANDARD-DETAILS			