1. TOP RAIL : 2 1/2"⌀ 14 GA.
2. POSTS : 2 1/2"⌀ 11 GA.
3. BOTTOM RAIL : 2" ⌀14 GA.
4. BAULSTERS : 1" ⌀ 14 GA.

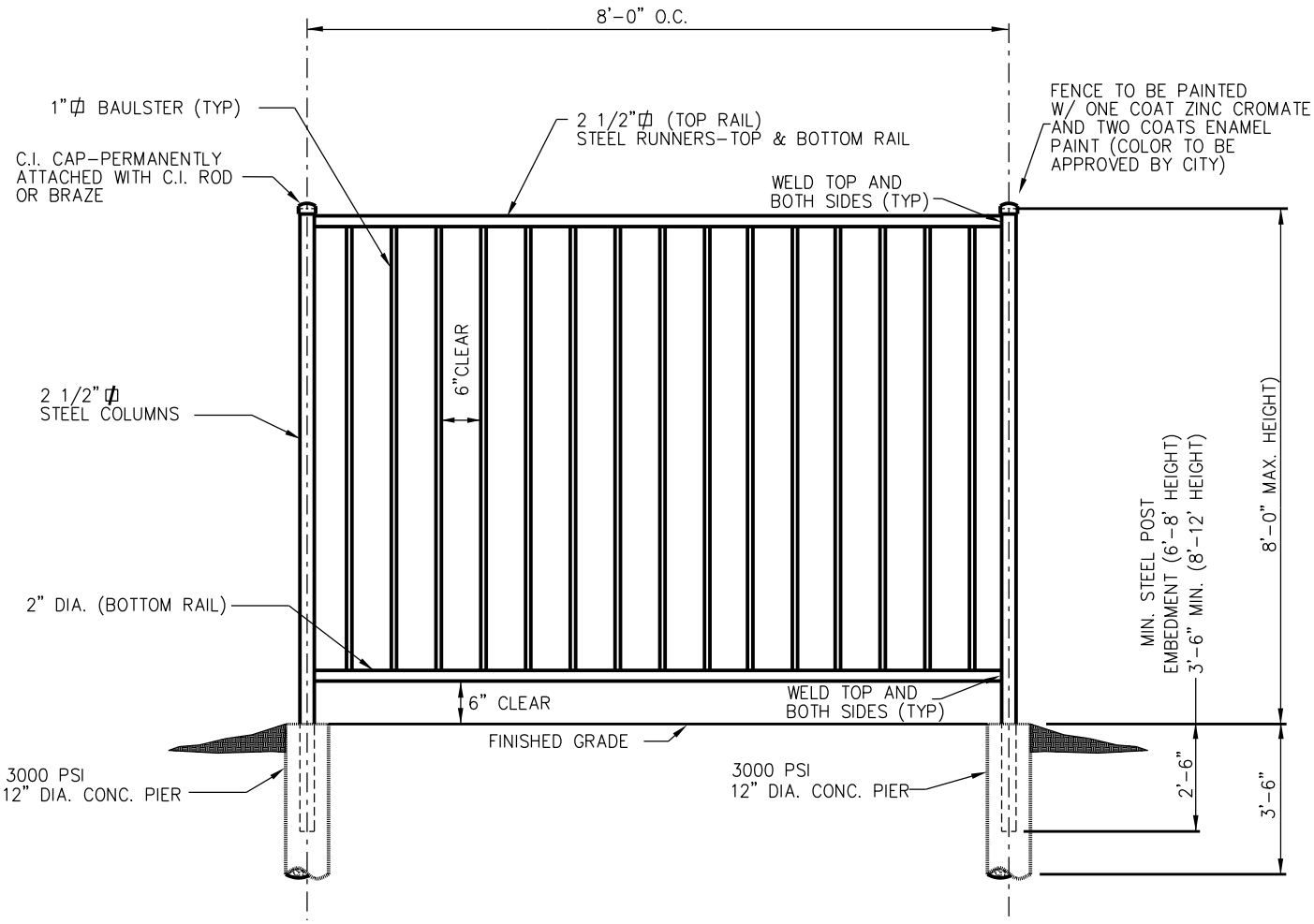

STEEL FENCE ELEVATION

NOTE: TO BE USED FOR FENCE PURPOSES ONLY. PEDESTRIAN RAILS REQUIRED BECAUSE OF VERTICAL SEPARATIONS SHOULD COMPLY WITH "PEDESTRIAN RAIL" DETAILS OR APPROVED EQUAL.

- FENCE TO BE PAINTED BY POWDER COATED SYSTEM.
- FIELD TOUCH UP ALL WELDS.
- THIS DETAIL APPLIES TO FENCES UP TO 6'. FENCES ABOVE 6' NEED TO BE APPROVED BY THE CITY.

REQ'D PIER DEPTH 6'-8' FENCE HEIGHT

3'-6"-P.I.-30 OR LESS
4'-0"-P.I.-31 TO 45
4'-6"-P.I.-46 AND ABOVE
OR 12" MIN. INTO SOLID ROCK

REQ'D PIER DEPTH 10' FENCE HEIGHT

4'-6"-P.I.-30 OR LESS
5'-0"-P.I.-31 TO 45
5'-6"-P.I.-46 AND ABOVE
OR 12" MIN. INTO SOLID ROCK

1/2

Revision Date:

Scale : N/A Date : 06/01/05	GARLAND ENGINEERING STANDARD DETAILS	STEEL FENCE ELEVATION	PAGE 1
Design :			
Drawn : SEL			
Dwg. File : SCWALL_001.DWG			
Project No. : STANDARD-DETAILS			

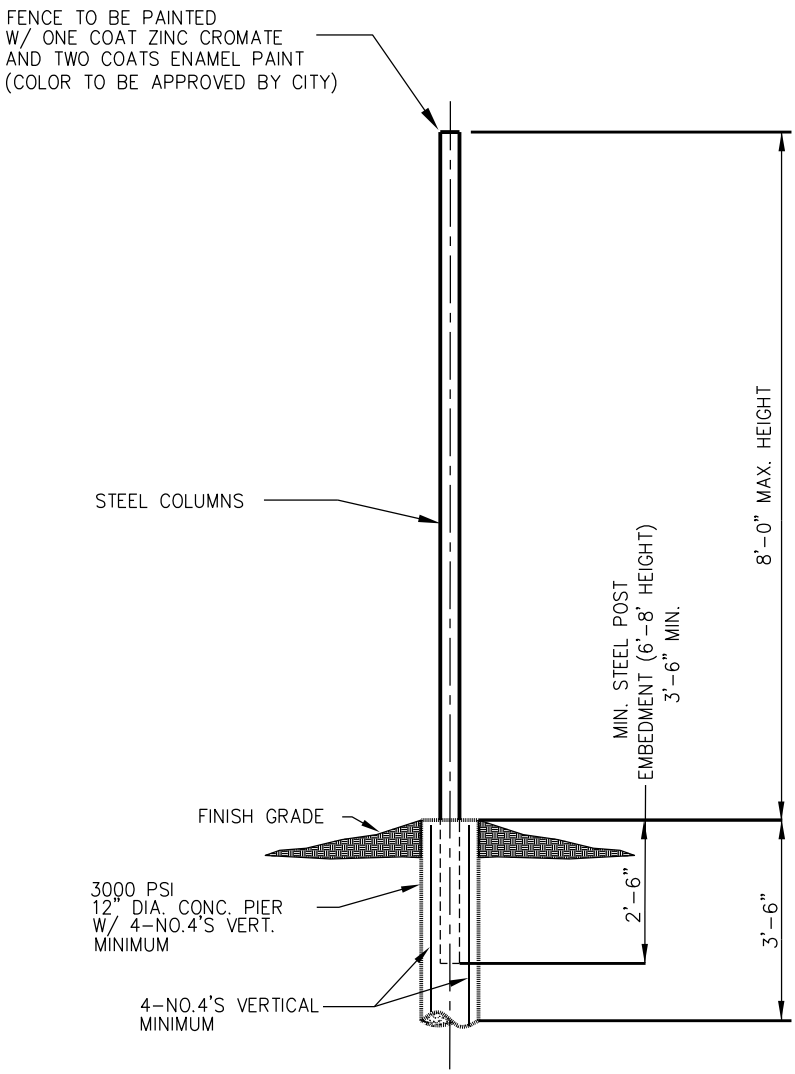

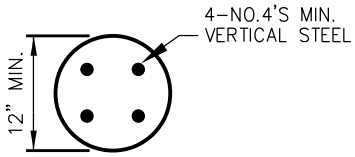

PIER PLAN VIEW

STEEL FENCE SECTION

NOTE: FENCE TO BE PAINTED BY POWDER COATED SYSTEM.
FIELD TOUCH UP ALL WELDS.

REQ'D PIER DEPTH 6'-8' FENCE HEIGHT

3'-6"-P.I.-30 OR LESS
4'-0"-P.I.-31 TO 45
4'-6"-P.I.-46 AND ABOVE
OR 12" MIN. INTO SOLID ROCK

REQ'D PIER DEPTH 10" FENCE HEIGHT

4'-6"-P.I.-30 OR LESS
5'-0"-P.I.-31 TO 45
5'-6"-P.I.-46 AND ABOVE
OR 12" MIN. INTO SOLID ROCK

2/2

Revision Date:

Scale : N/A Date : 06/01/05	GARLAND ENGINEERING STANDARD DETAILS	STEEL FENCE SECTION & PIER PLAN VIEW
Design :		
Drawn : SEL		
Dwg. File : SCWALL_001.DWG		
Project No. : STANDARD-DETAILS		

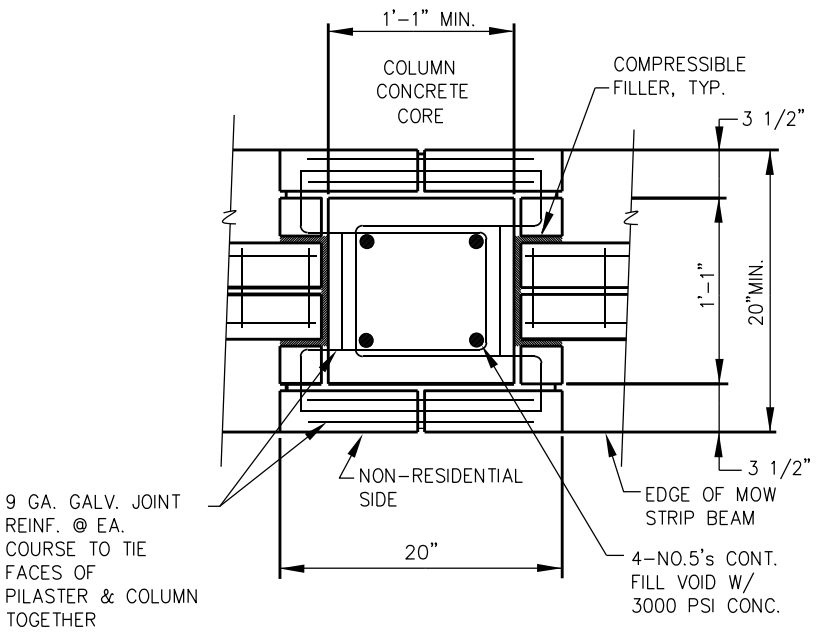

COLUMN TOP VIEW (DOUBLE-WYTHE) STANDARD

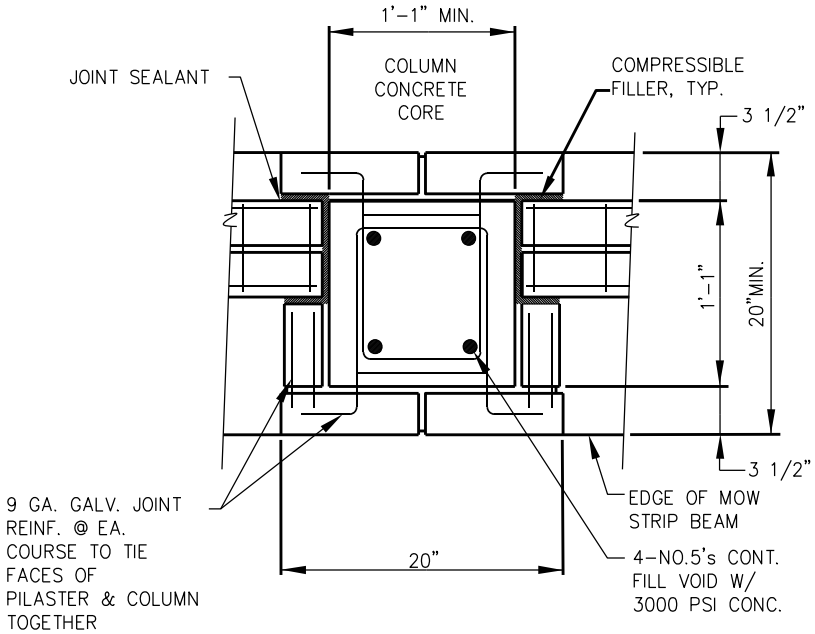

COLUMN TOP VIEW (DOUBLE-WYTHE) ALTERNATIVE LOCATION

NOTE:
USE 3/8" MORTAR JOINTS, TYP.

1/6

Revision Date:			
Scale : N/A Date : 06/01/05	GARLAND ENGINEERING STANDARD DETAILS	COLUMN TOP VIEW DOUBLE-WYTHE STANDARD & ALTERNATIVE LOCATION	PAGE 3
Design :			
Drawn : SEL			
Dwg. File : SCWALL_001.DWG			
Project No. : STANDARD-DETAILS			

COLUMN DIMENSIONS SHOWN ARE BASED ON KING SIZE BRICK. OTHER BRICK SIZES MAY BE USED SUBJECT TO CITY APPROVAL. MAINTAIN MINIMUM DIMENSIONS.

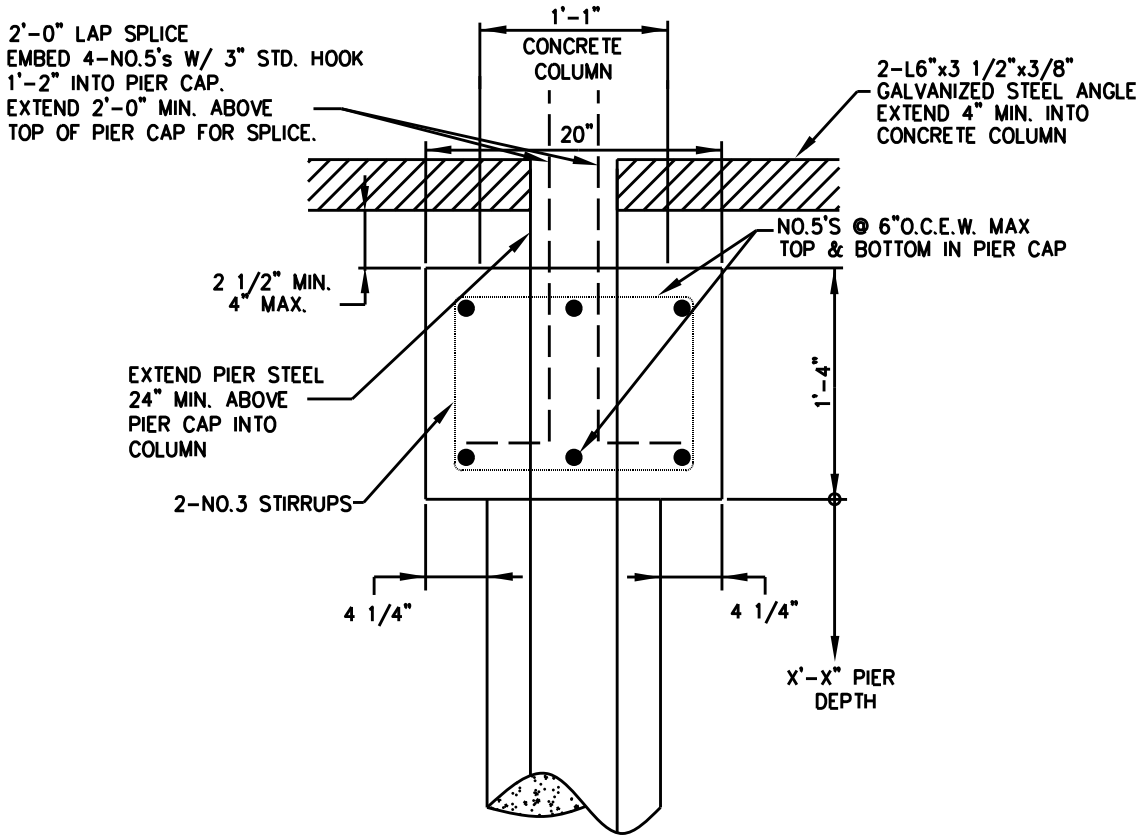

PIER CAP DETAIL (DOUBLE WYTHE)

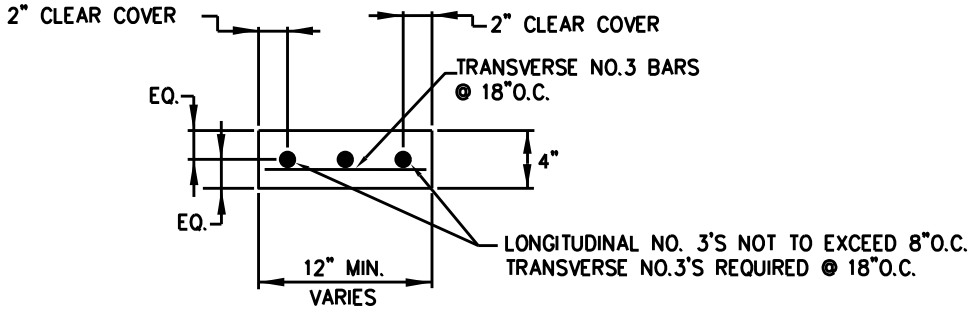

MOW STRIP DETAIL

MOW STRIP REQUIRED AT STREET R.O.W. SIDE OF WALL

2/6

Revision Date: 07/07			
Scale : N/A Date : 06/01/05	GARLAND ENGINEERING STANDARD DETAILS	PIER CAP DETAIL & MOW STRIP DETAIL	PAGE 4
Design :			
Drawn : SEL			
Dwg. File : SCWALL_001.DWG			
Project No. : STANDARD-DETAILS			

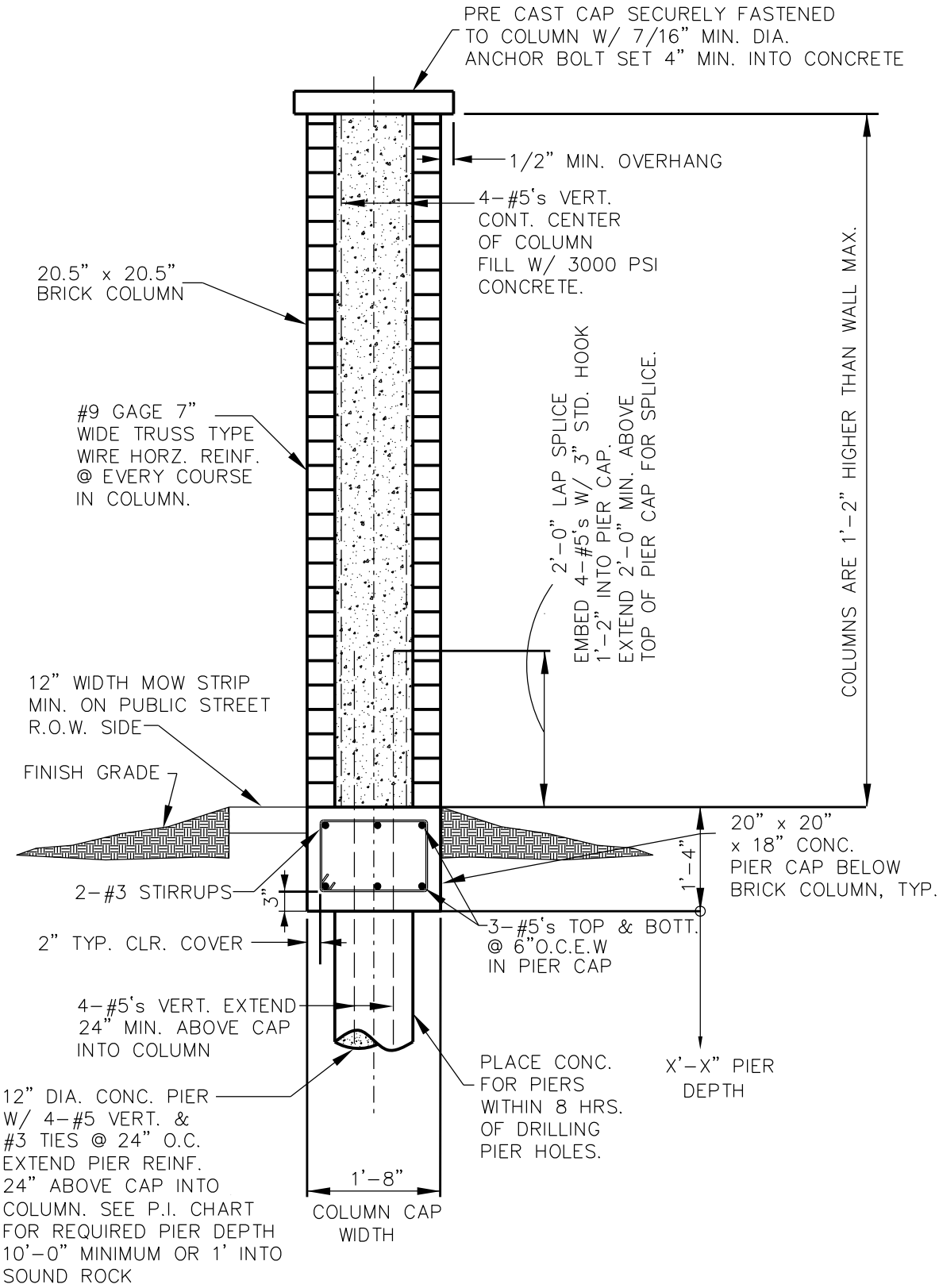

DOUBLE- WYTHE BRICK WALL COLUMN SECTION

3/6

Revision Date: 07/2010

Scale : N/A Date : 06/01/05	GARLAND ENGINEERING STANDARD DETAILS	DOUBLE-WYTHE BRICK WALL COLUMN SECTION
Design :		
Drawn : SEL		
Dwg. File : SCWALL_001.DWG		
Project No. : STANDARD-DETAILS		

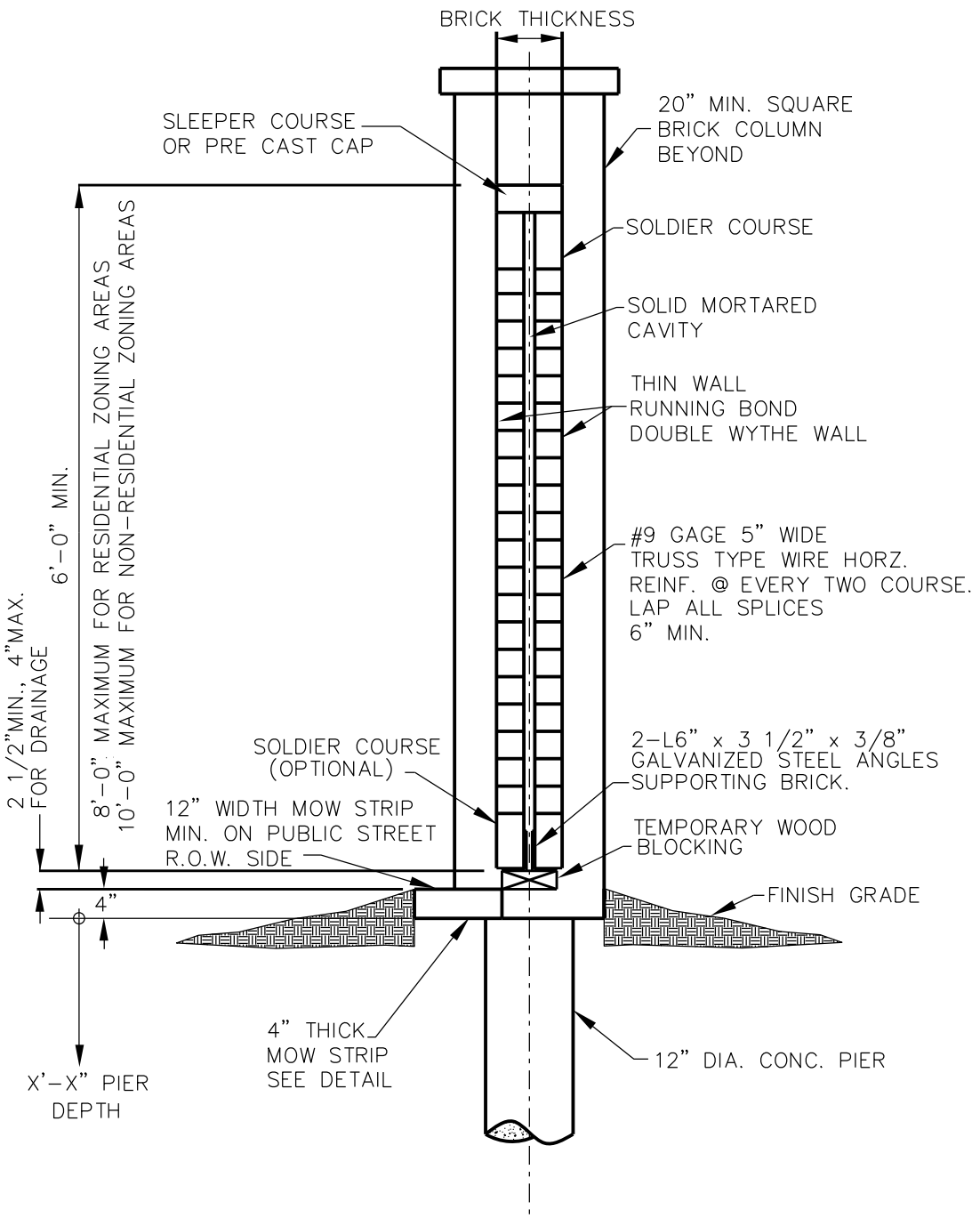

DOUBLE- WYTHE BRICK WALL SECTION STANDARD

4
6

Revision Date:			
Scale : N/A Date : 06/01/05	GARLAND ENGINEERING STANDARD DETAILS	DOUBLE-WYTHE BRICK WALL SECTION STANDARD	PAGE 6
Design :			
Drawn : SEL			
Dwg. File : SCWALL_001.DWG			
Project No. : STANDARD-DETAILS			

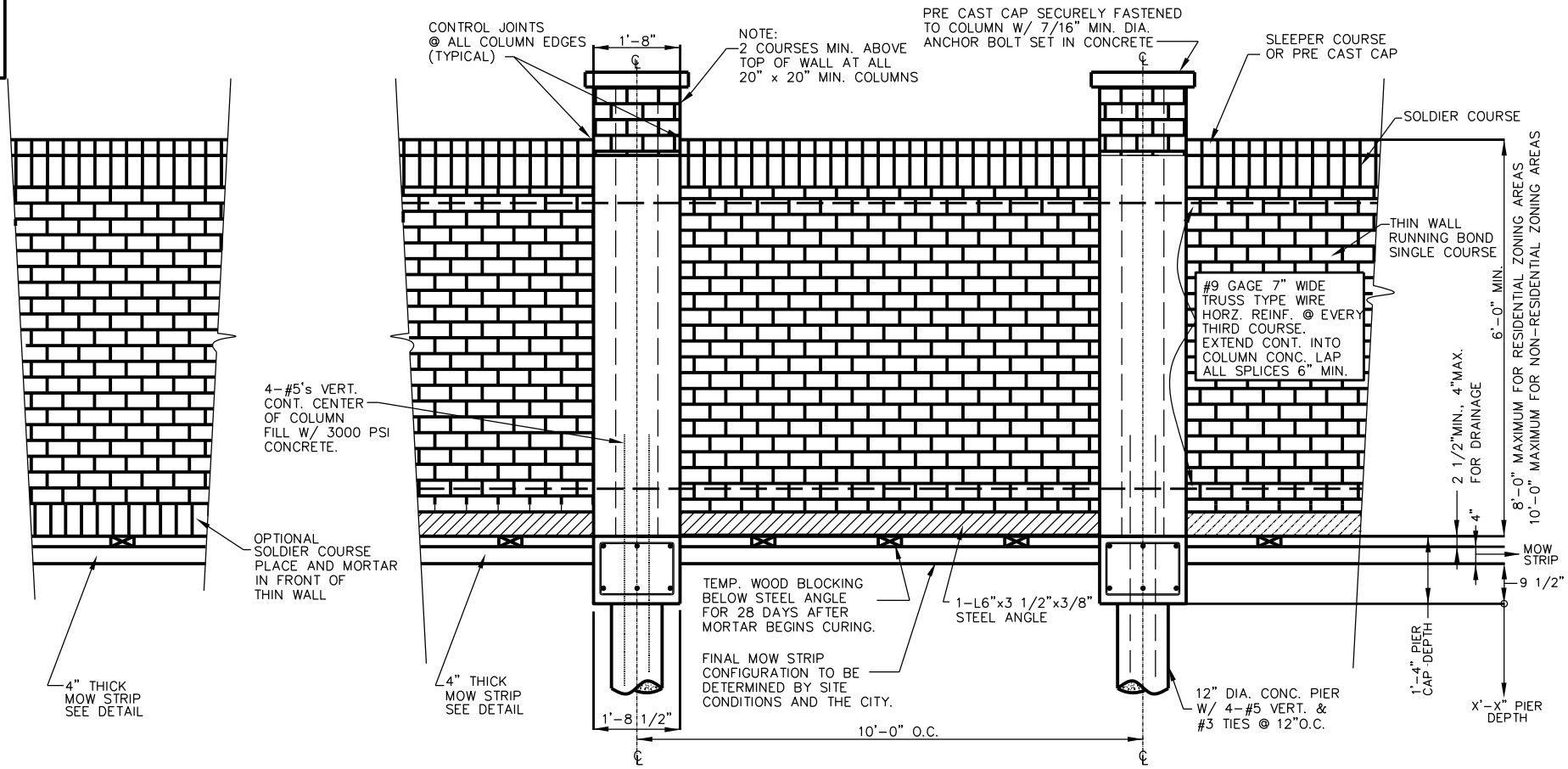

DOUBLE- WYTHE BRICK WALL PANEL ELEVATION W/ ANGLE (OPTION 1)

Revision Date: 07/2010

Scale : N/A Date : 06/01/05
Design :
Drawn : SEL
Dwg. File : SCWALL_001.DWG
Project No. : STANDARD-DETAILS

GARLAND ENGINEERING

STANDARD DETAILS

DOUBLE-WYTHE BRICK WALL PANEL ELEVATION WITH ANGLE

5/6

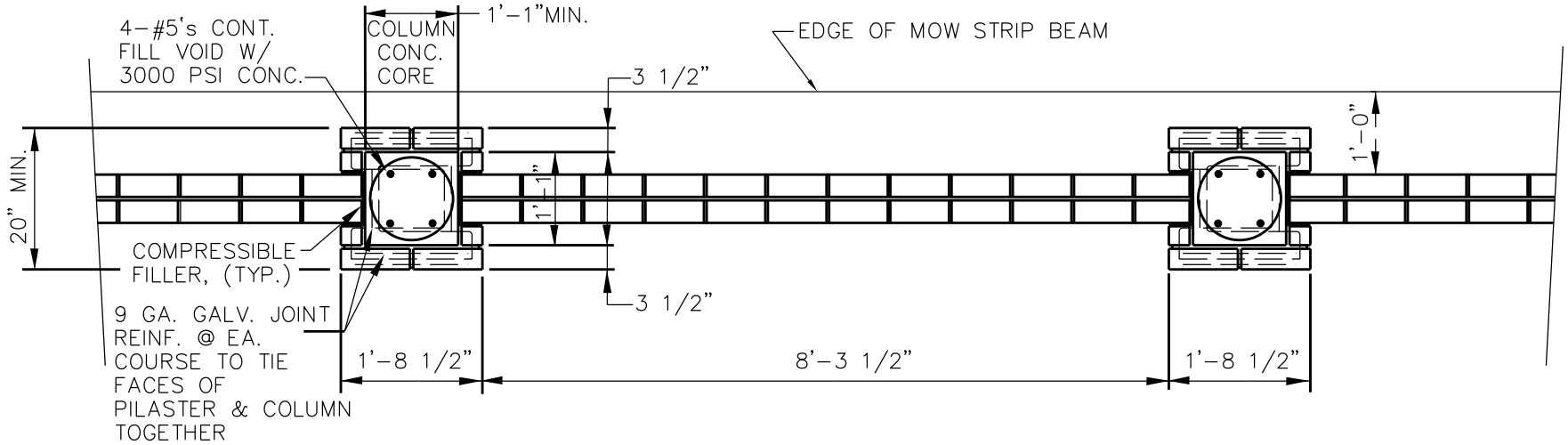

PLAN VIEW
DOUBLE-WYTHE BRICK WALL (OPTION 1)
STANDARD COLUMN LOCATION

Revision Date:

Scale : N/A Date : 06/01/05
Design :
Drawn : SEL
Dwg. File : SCWALL_001.DWG
Project No. : STANDARD-DETAILS

GARLAND ENGINEERING
STANDARD DETAILS

PLAN VIEW DOUBLE-WYTHE
BRICK WALL STANDARD
COLUMN LOCATION

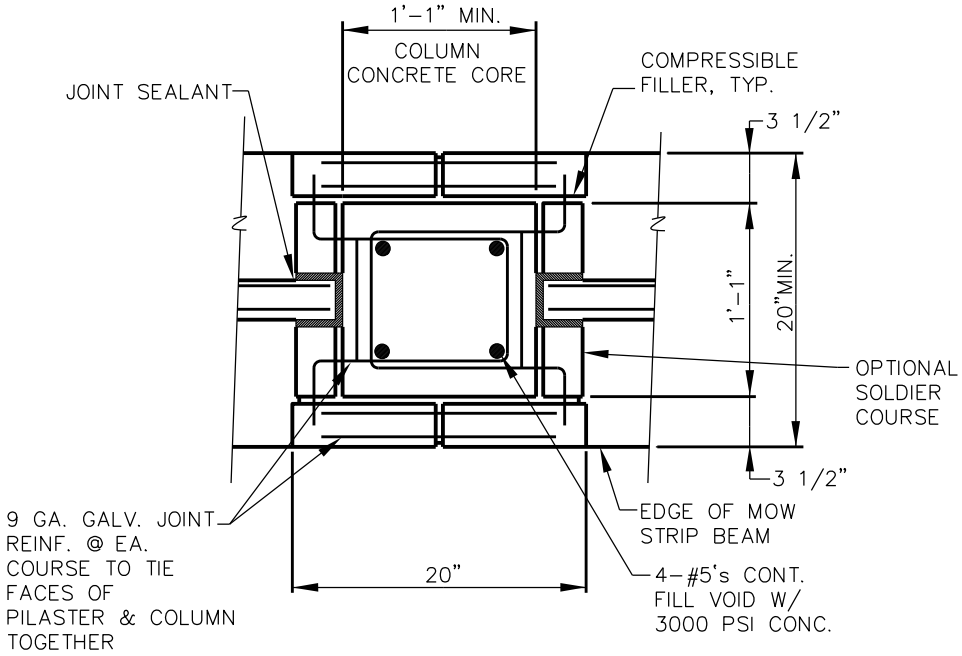

COLUMN TOP VIEW (SINGLE-WYTHE) STANDARD

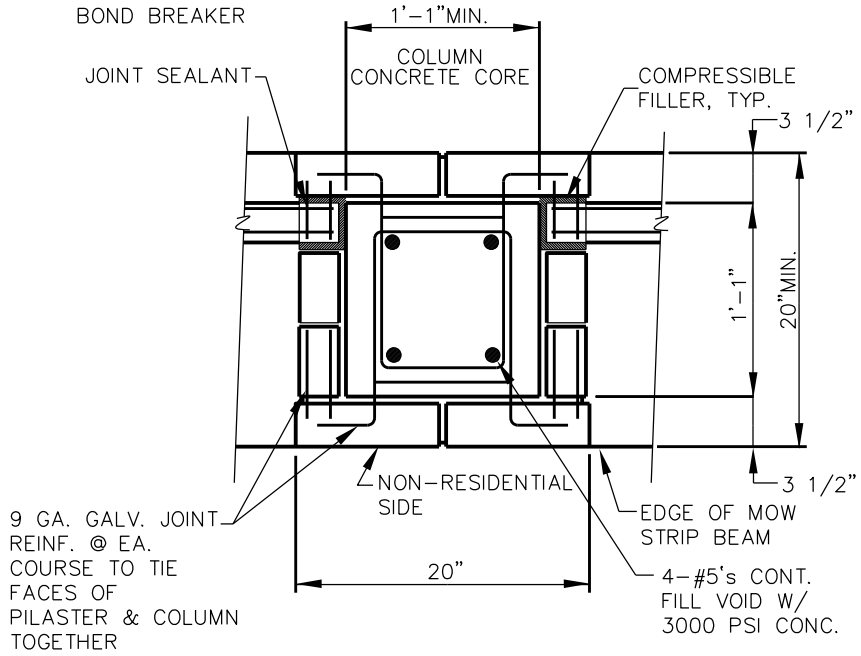

COLUMN TOP VIEW (SINGLE-WYTHE) ALTERNATIVE LOCATION

NOTE:
USE 3/8" MORTAR JOINTS TYP.

Revision Date: 06/17/10

1/7

Scale : N/A Date : 06/01/05	GARLAND ENGINEERING STANDARD DETAILS	COLUMN TOP VIEW (SINGLE-WYTHE) STANDARD & ALTERNATIVE LOCATION	PAGE 9
Design :			
Drawn : SEL			
Dwg. File : SCWALL_002.DWG			
Project No. : STANDARD-DETAILS			

COLUMN DIMENSIONS SHOWN ARE BASED ON KING SIZE BRICK. OTHER BRICK SIZES MAY BE USED SUBJECT TO CITY APPROVAL. MAINTAIN MINIMUM DIMENSIONS.

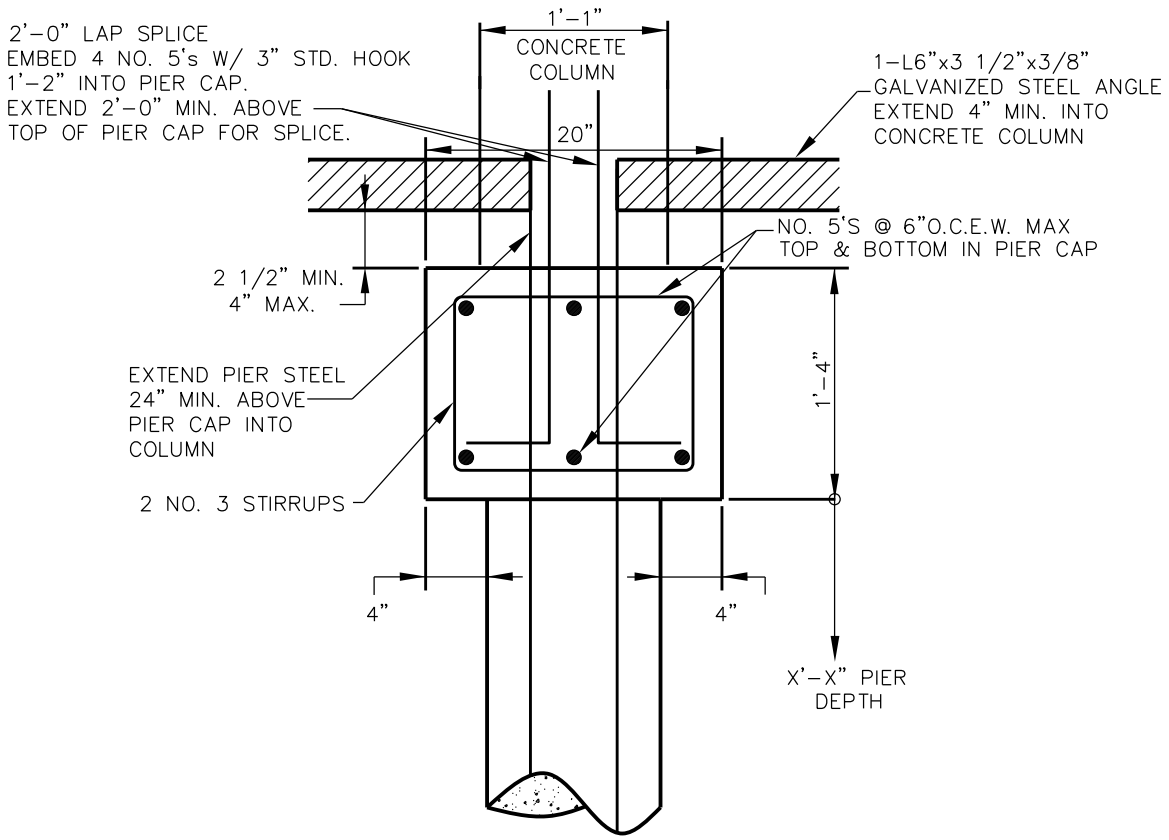

PIER CAP DETAIL (SINGLE WYTHE)

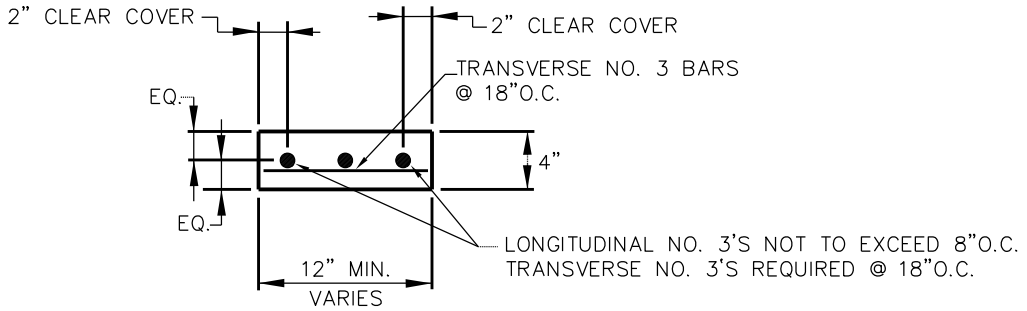

MOW STRIP DETAIL

MOW STRIP REQUIRED AT STREET
R.O.W. SIDE OF WALL

Revision Date: 06/14/10

2/7

Scale : N/A Date : 06/01/05	GARLAND ENGINEERING STANDARD DETAILS	PIER CAP DETAIL & MOW STRIP DETAIL	PAGE 10
Design :			
Drawn : SEL			
Dwg. File : SCWALL_002.DWG			
Project No. : STANDARD-DETAILS			

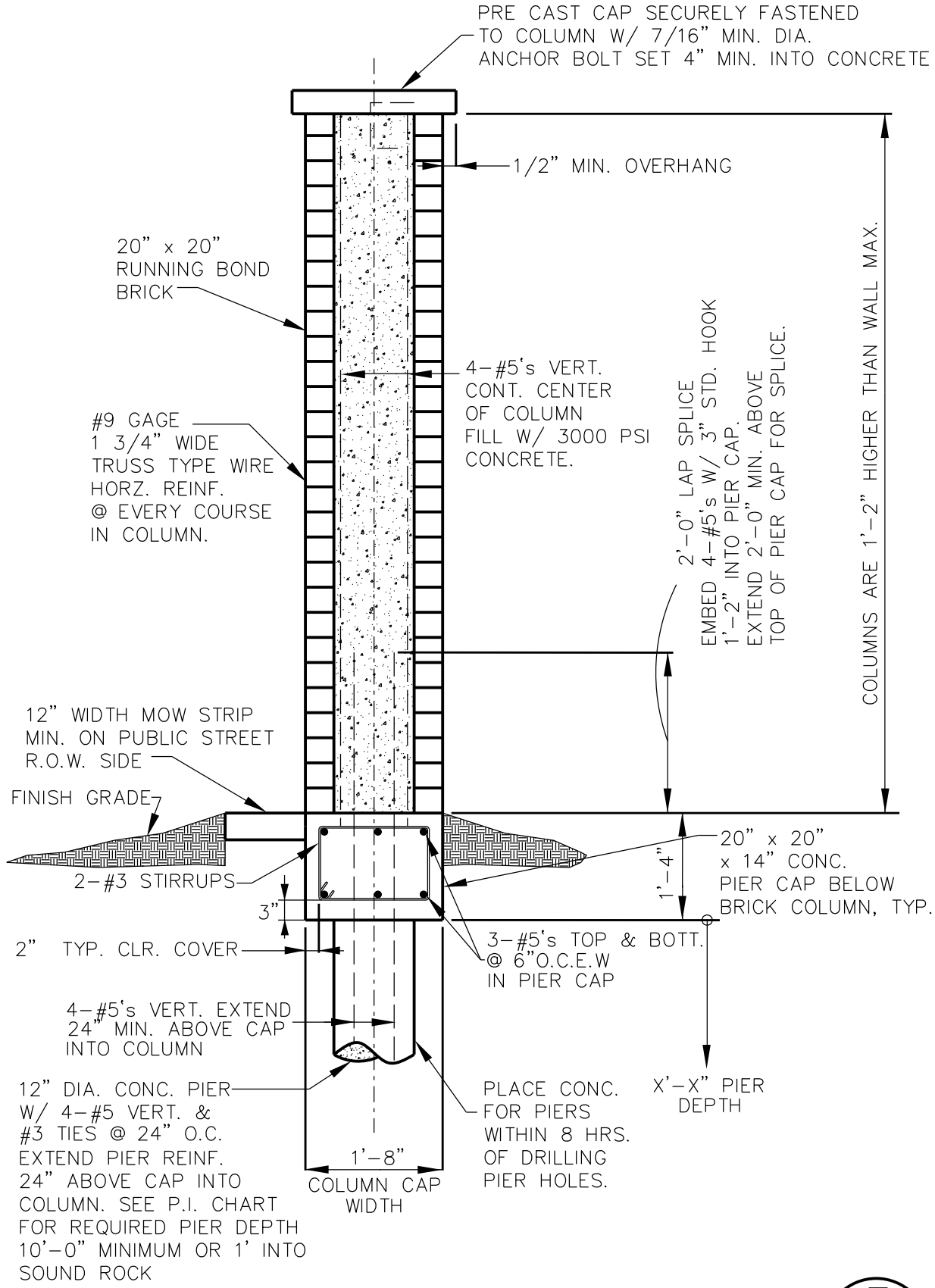

SINGLE- WYTHE BRICK WALL COLUMN SECTION (OPTION 2)

3/7

Revision Date: 06/14/10

Scale : N/A Date : 06/01/05	GARLAND ENGINEERING STANDARD DETAILS	SINGLE-WYTHE BRICK COLUMN SECTION (OPTION 2)
Design :		
Drawn : SEL		
Dwg. File : SCWALL_002.DWG		
Project No. : STANDARD-DETAILS		

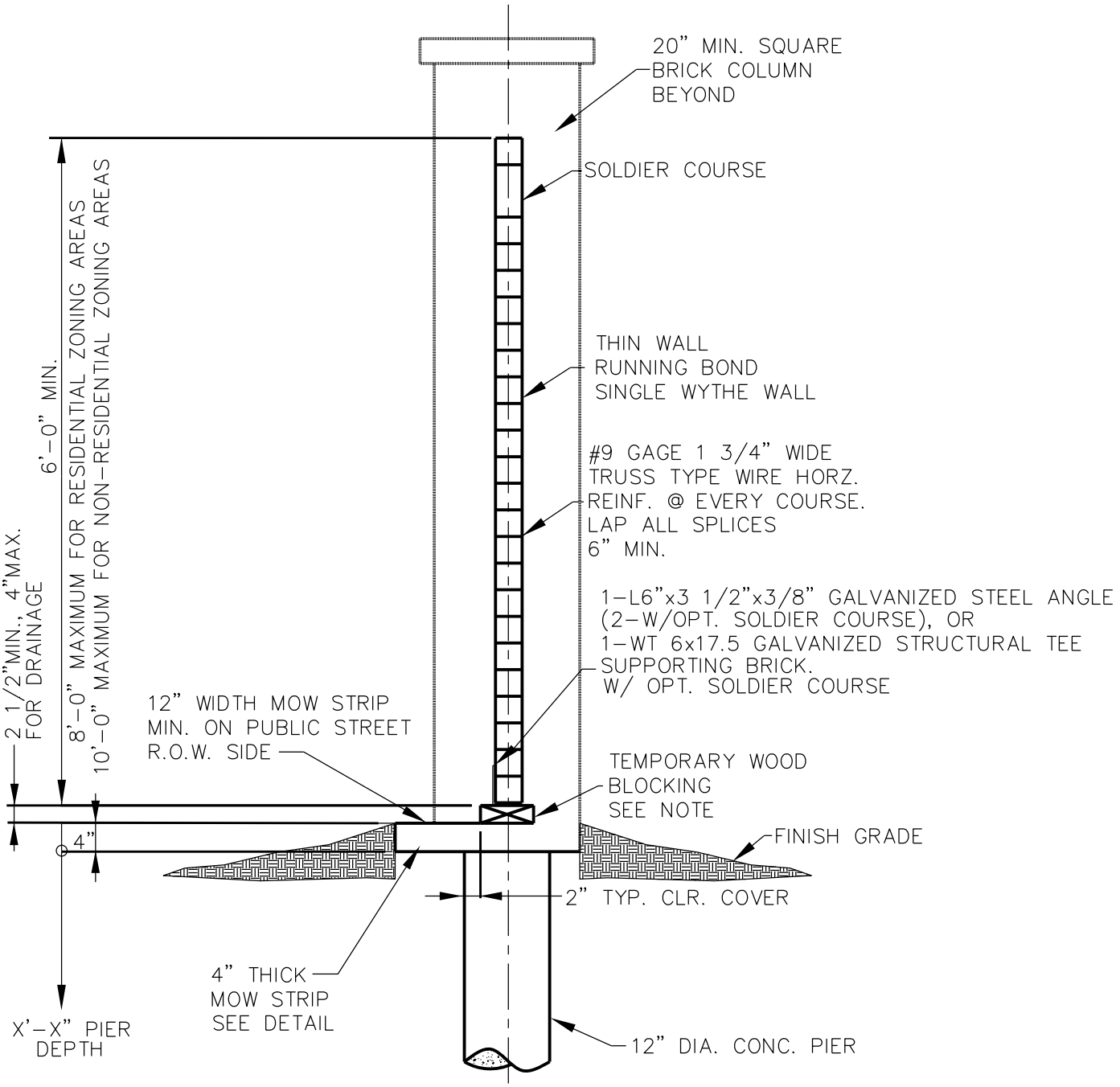

SINGLE- WYTHE BRICK WALL SECTION (OPTION 2)

4/7

Revision Date:

Scale : N/A Date : 06/01/05	GARLAND ENGINEERING STANDARD DETAILS	SINGLE-WYTHE BRICK WALL SECTION (OPTION 2)
Design :		
Drawn : SEL		
Dwg. File : SCWALL_002.DWG		
Project No. : STANDARD-DETAILS		

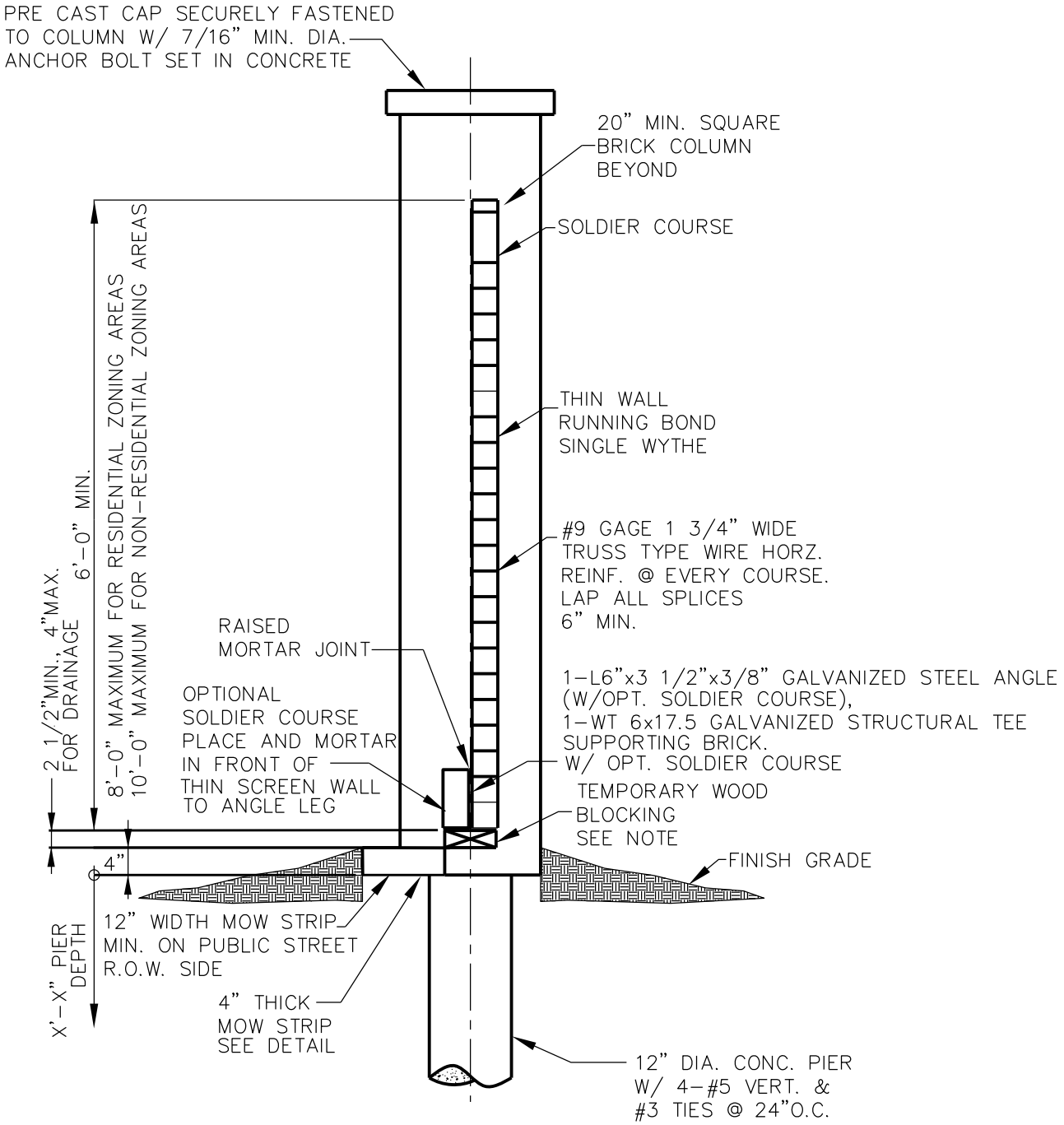

SINGLE- WYTHE BRICK WALL SECTION (OPTION 2)

5/7

Revision Date:

Scale : N/A Date : 06/01/05	GARLAND ENGINEERING STANDARD DETAILS	SINGLE-WYTHE BRICK WALL SECTION	PAGE 13
Design :			
Drawn : SEL			
Dwg. File : SCWALL_002.DWG			
Project No. : STANDARD-DETAILS			

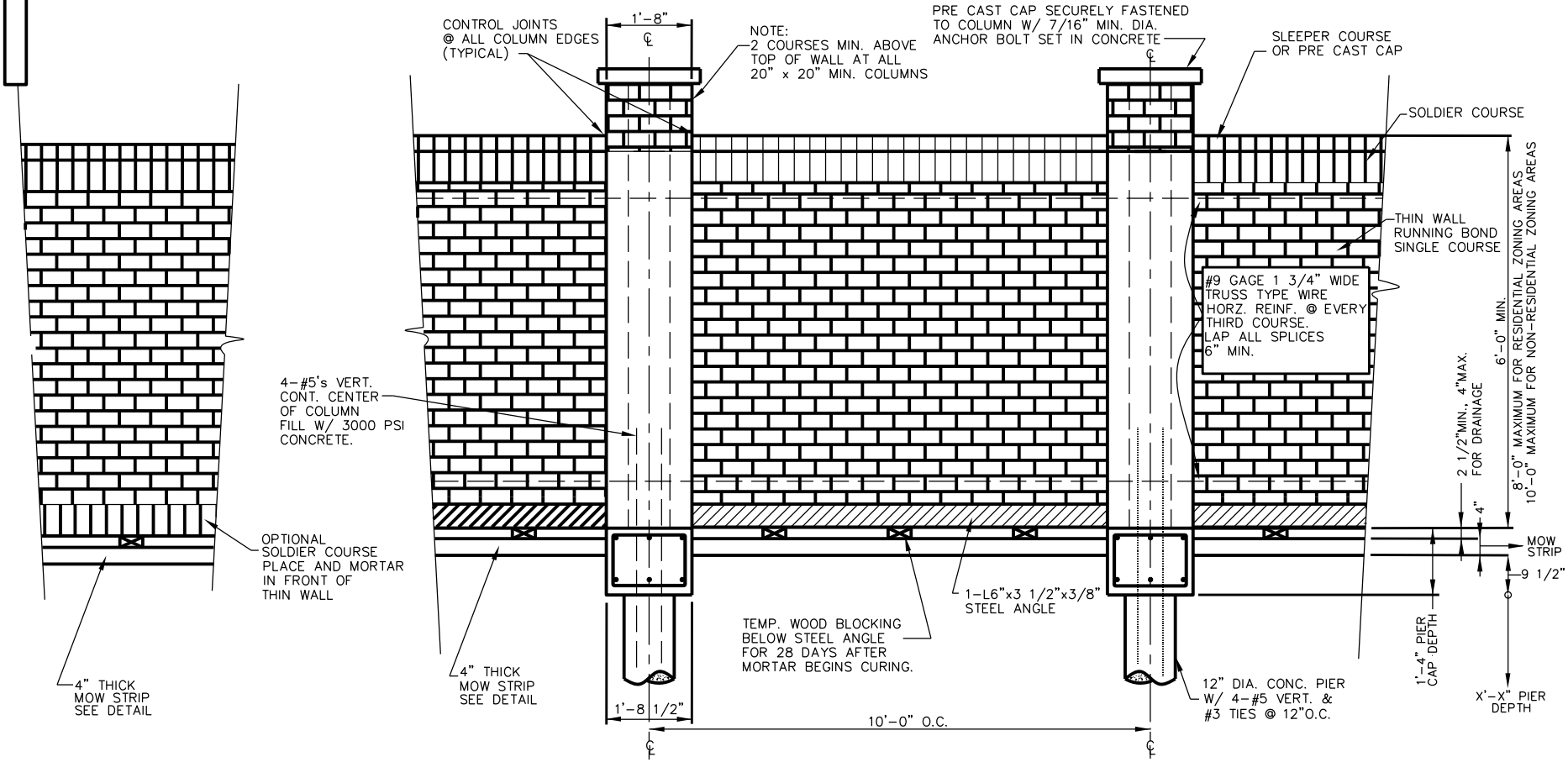

SINGLE- WYTHE BRICK WALL PANEL ELEVATION W/ ANGLE

Revision Date:

Scale : N/A Date : 06/01/05
Design :
Drawn : SEL
Dwg. File : SCWALL_002.DWG
Project No. : STANDARD-DETAILS

GARLAND ENGINEERING

STANDARD DETAILS

SINGLE-WYTHE BRICK WALL PANEL ELEVATION WITH ANGLE

6/7

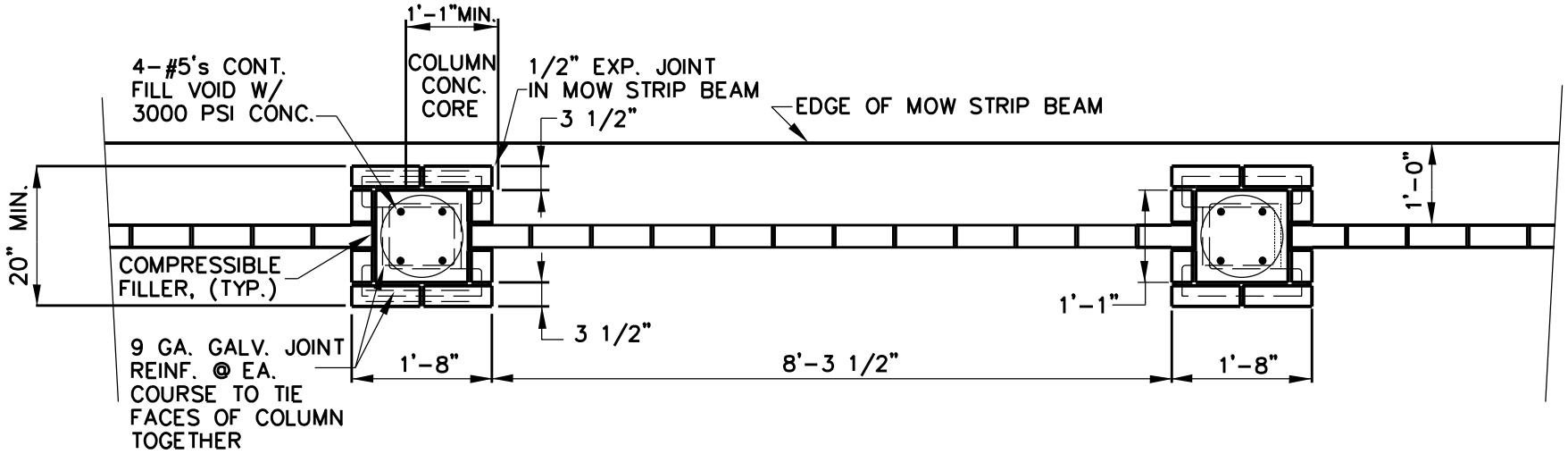

PLAN VIEW
SINGLE-WYTHE BRICK WALL (OPTION 2)
STANDARD COLUMN LOCATION

Revision Date: 06/14/10

Scale : N/A Date : 06/01/05
Design :
Drawn : SEL
Dwg. File : SCWALL_002.DWG
Project No. : STANDARD-DETAILS

GARLAND ENGINEERING
STANDARD DETAILS

SINGLE-WYTHE BRICK WALL STANDARD COLUMN LOCATION (OPTION 2)

7/7

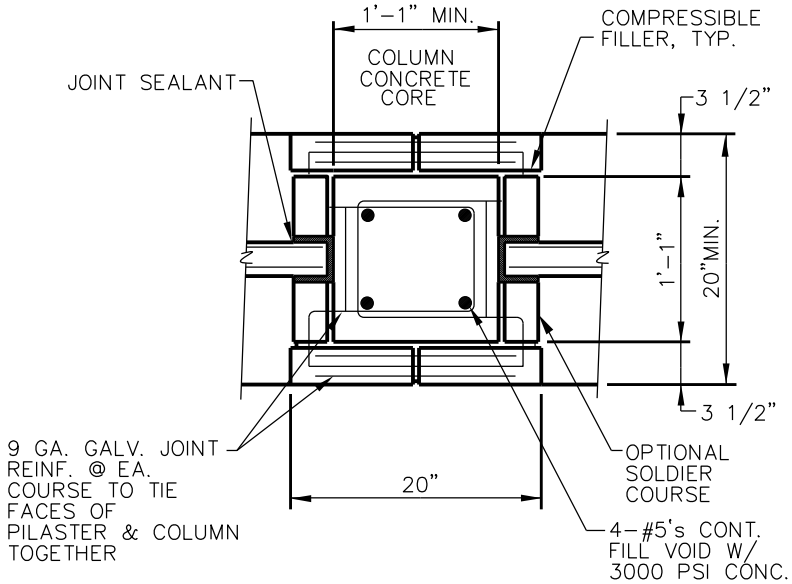

COLUMN TOP VIEW (SINGLE-WYTHE) STANDARD COLUMN LOCATION

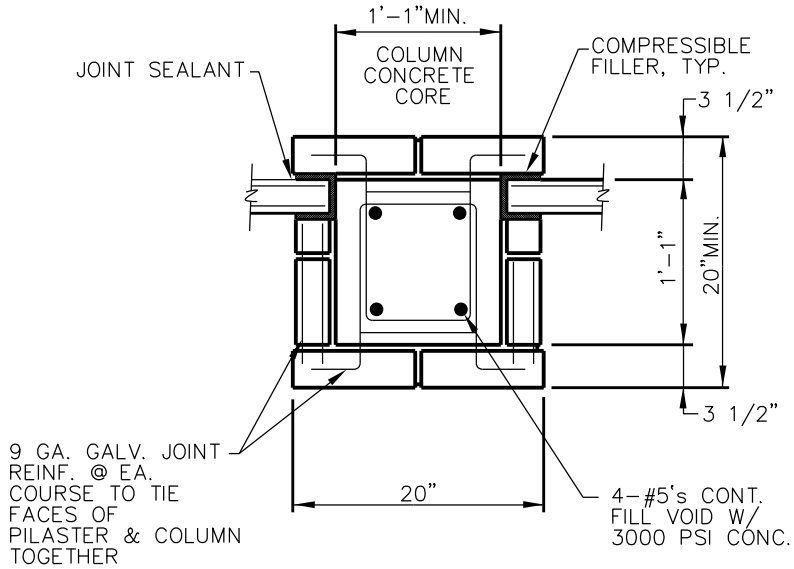

COLUMN TOP VIEW (SINGLE-WYTHE) ALTERNATIVE LOCATION

NOTE:
USE 3/8" MORTAR JOINTS TYP.

1/11

Revision Date: 06/17/10

Scale : N/A Date : 06/01/05	GARLAND ENGINEERING STANDARD DETAILS	COLUMN TOP VIEW (SINGLE-WYTHE) STANDARD & ALTERNATIVE LOCATION	PAGE 16
Design :			
Drawn : SEL			
Dwg. File : SCWALL_003.DWG			
Project No. : STANDARD-DETAILS			

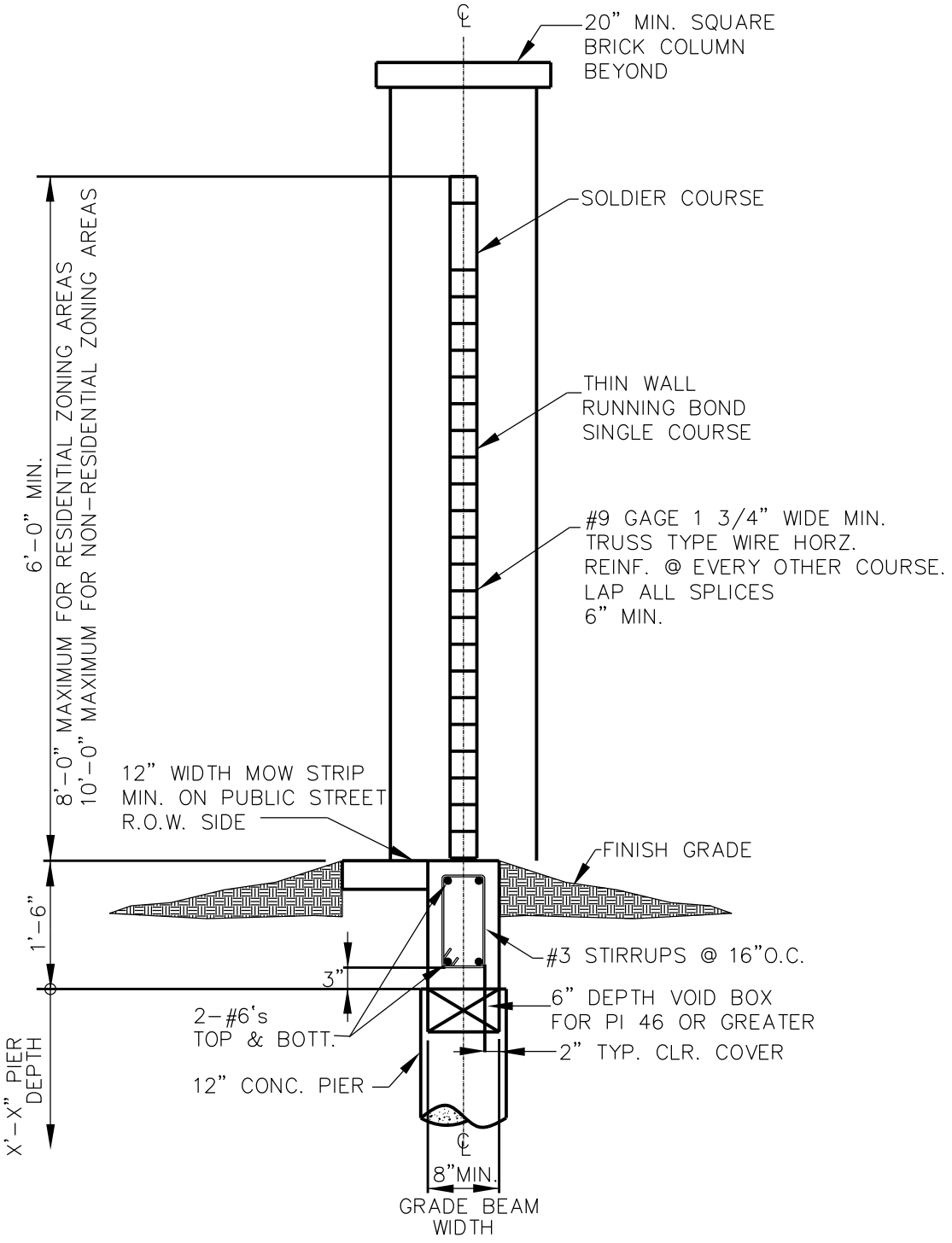

SINGLE- WYTHE BRICK WALL
SECTION W/ GRADE BEAM STANDARD

2
11

Revision Date: 06/14/10

Scale : N/A Date : 06/01/05	GARLAND ENGINEERING STANDARD DETAILS	SINGLE-WYTHE BRICK WALL SECTION W/ GRADE BEAM STANDARD	PAGE 17
Design :			
Drawn : SEL			
Dwg. File : SCWALL_003.DWG			
Project No. : STANDARD-DETAILS			

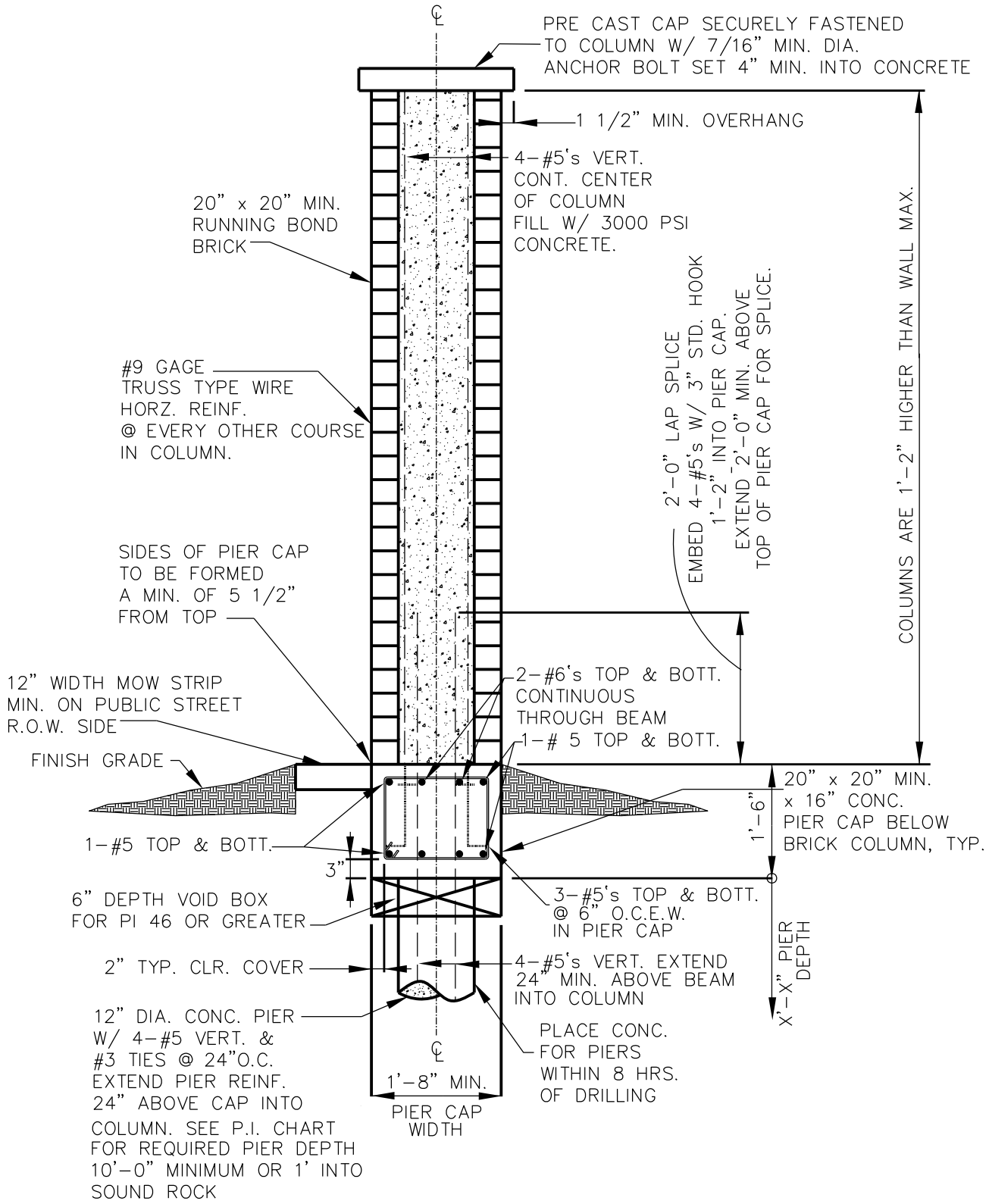

SINGLE- WYTHE BRICK WALL COLUMN SECTION W/ GRADE BEAM

3/11

Revision Date: 06/14/10

Scale : N/A Date : 06/01/05	GARLAND ENGINEERING STANDARD DETAILS	SINGLE-WYTHE BRICK WALL SECTION W/ GRADE BEAM
Design :		
Drawn : SEL		
Dwg. File : SCWALL_003.DWG		
Project No. : STANDARD-DETAILS		

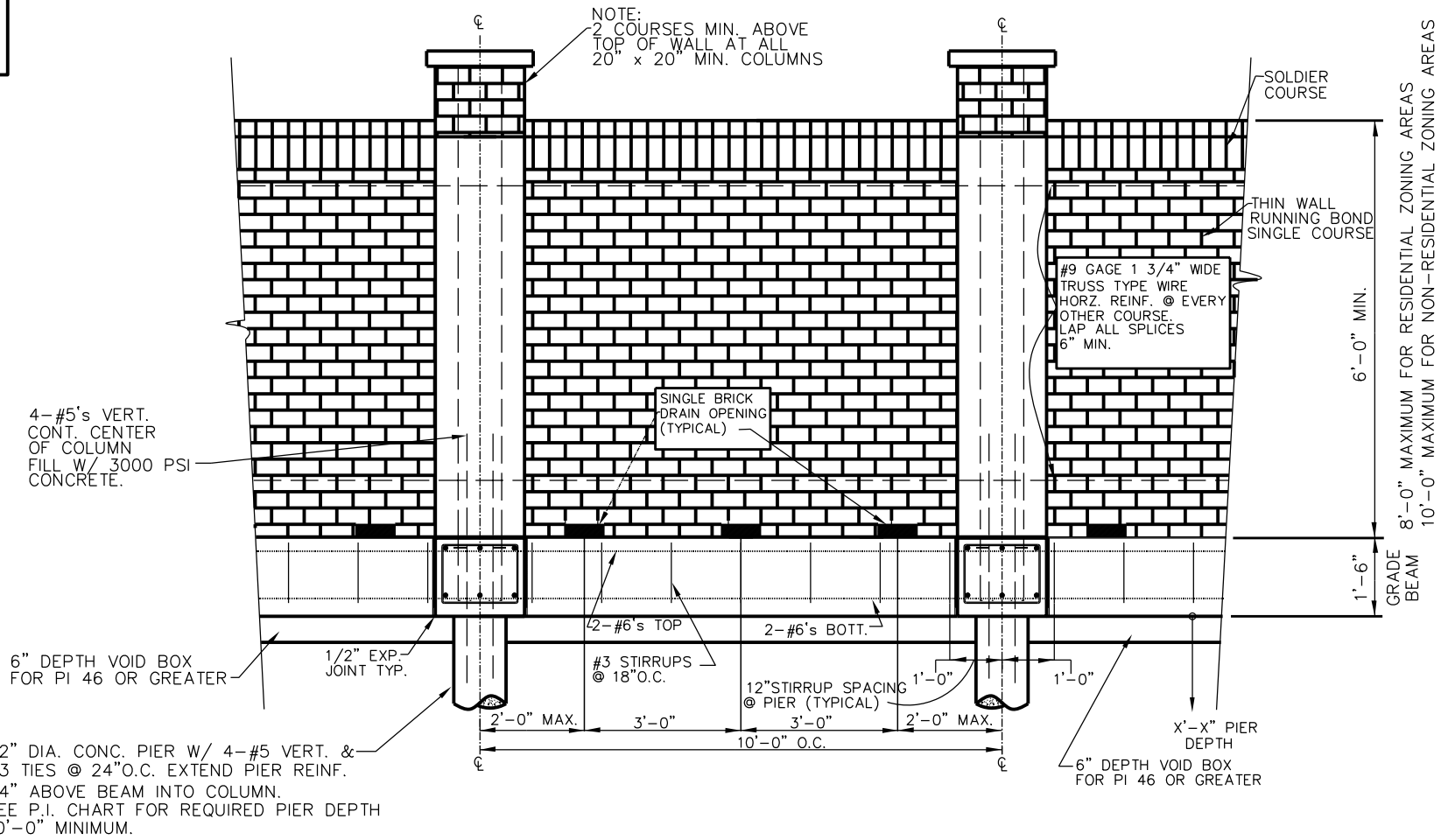

SINGLE- WYTHE BRICK
WALL PANEL ELEVATION W/ GRADE BEAM

4
11

Revision Date:

Scale : N/A Date : 06/01/05
Design :
Drawn : SEL
Dwg. File : SCWALL_003.DWG
Project No. : STANDARD-DETAILS

GARLAND
ENGINEERING
STANDARD DETAILS

SINGLE- WYTHE BRICK
WALL PANEL ELEVATION
WITH GRADE BEAM

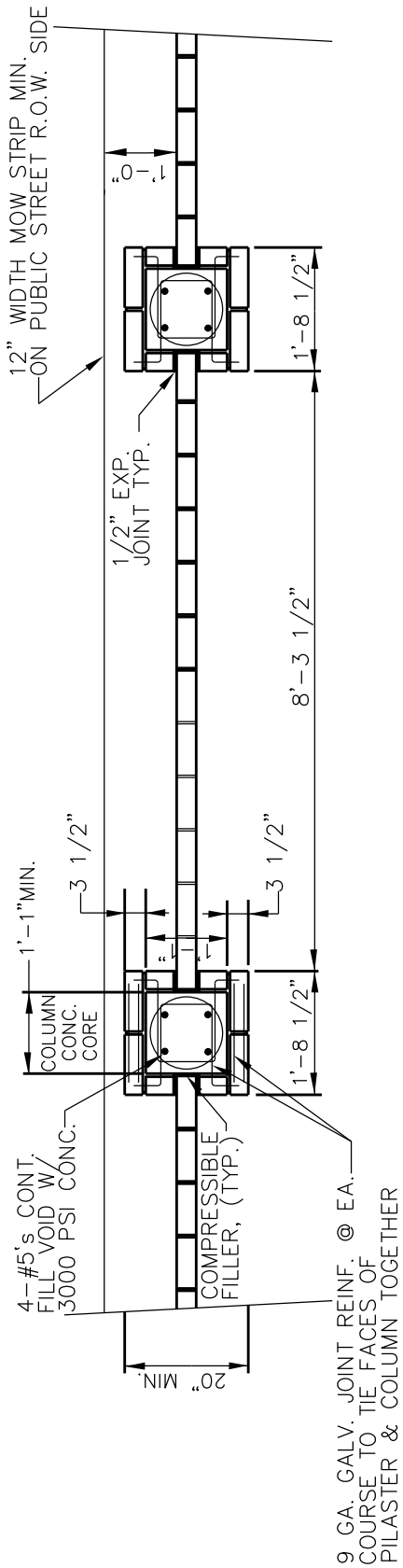

PLAN VIEW
SINGLE-WYTHE BRICK WALL

5
11

Revision Date: 06/14/10

Scale : N/A Date : 06/01/05	GARLAND ENGINEERING STANDARD DETAILS	PLAN VIEW SINGLE-WYTHE BRICK WALL
Design :		
Drawn : SEL		
Dwg. File : SCWALL_003.DWG		
Project No. : STANDARD-DETAILS		

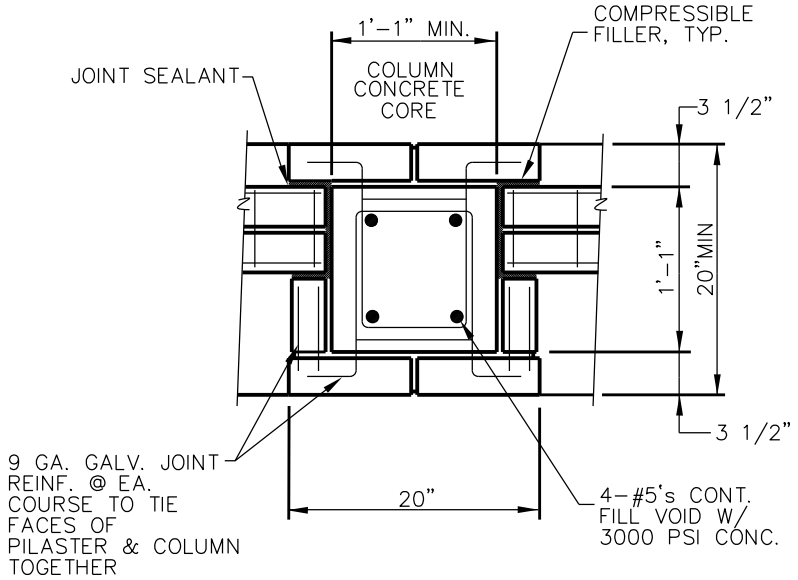

COLUMN TOP VIEW (DOUBLE-WYTHE) ALTERNATIVE LOCATION

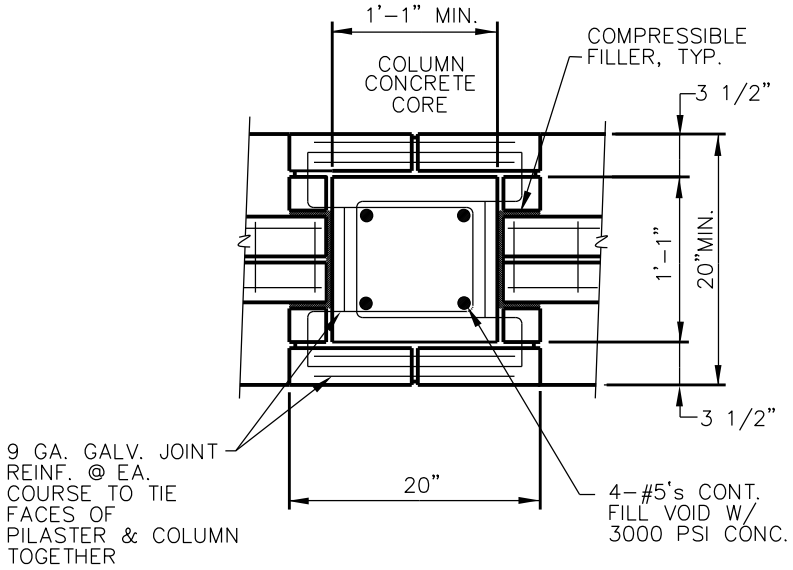

COLUMN TOP VIEW (DOUBLE-WYTHE) STANDARD COLUMN LOCATION

NOTE:
USE 3/8" MORTAR JOINTS TYP.

6
11

Revision Date:

Scale : N/A Date : 06/01/05	GARLAND ENGINEERING STANDARD DETAILS	COLUMN TOP VIEW (DOUBLE-WYTHE) STANDARD & ALTERNATIVE LOCATION	PAGE 21
Design :			
Drawn : SEL			
Dwg. File : SCWALL_003.DWG			
Project No. : STANDARD-DETAILS			

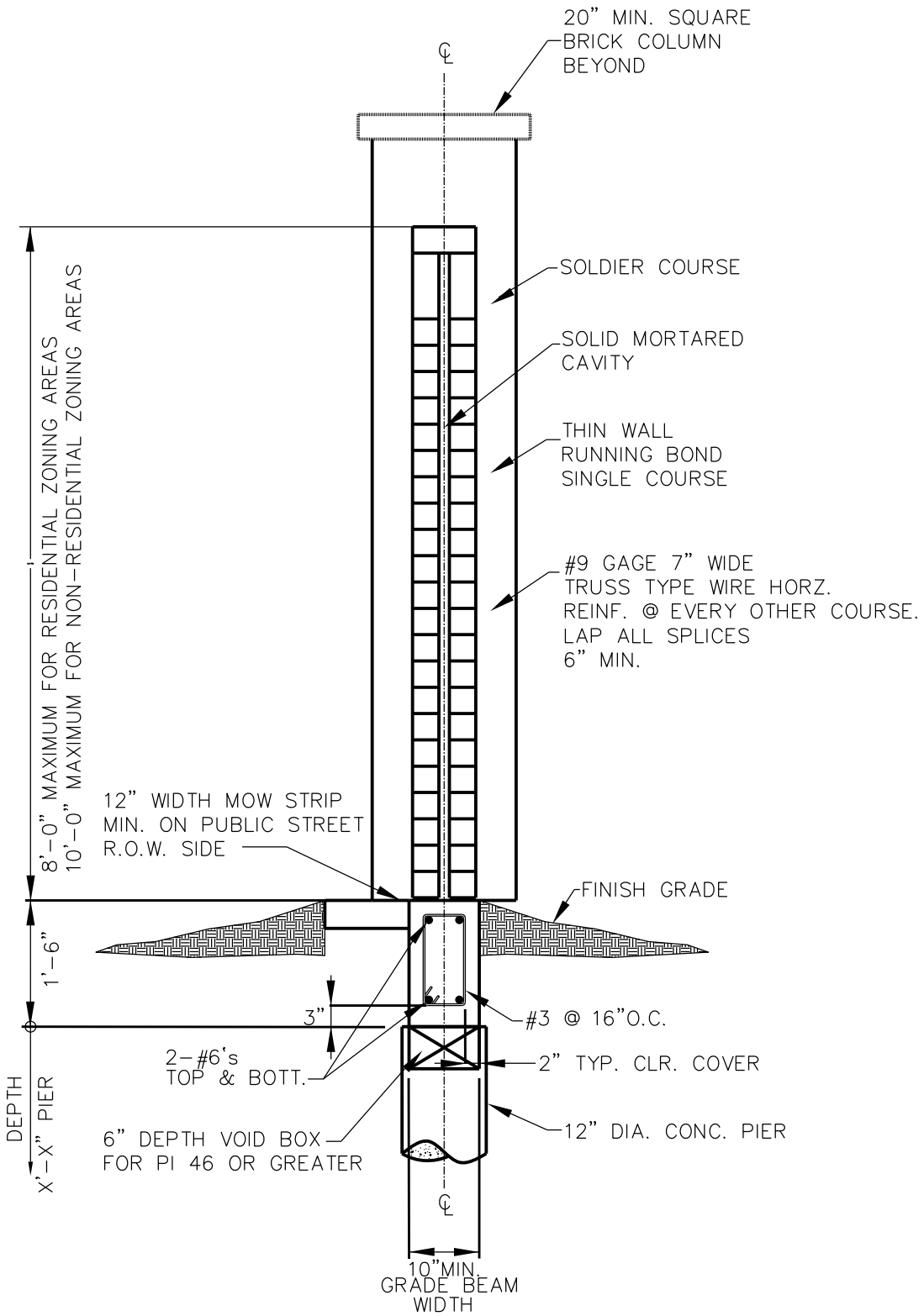

DOUBLE- WYTHE BRICK WALL SECTION W/ GRADE BEAM STANDARD

7
11

Revision Date:

Scale : N/A Date : 06/01/05	GARLAND ENGINEERING STANDARD DETAILS	DOUBLE-WYTHE BRICK WALL W/ GRADE BEAM STANDARD
Design :		
Drawn : SEL		
Dwg. File : SCWALL_003.DWG		
Project No. : STANDARD-DETAILS		

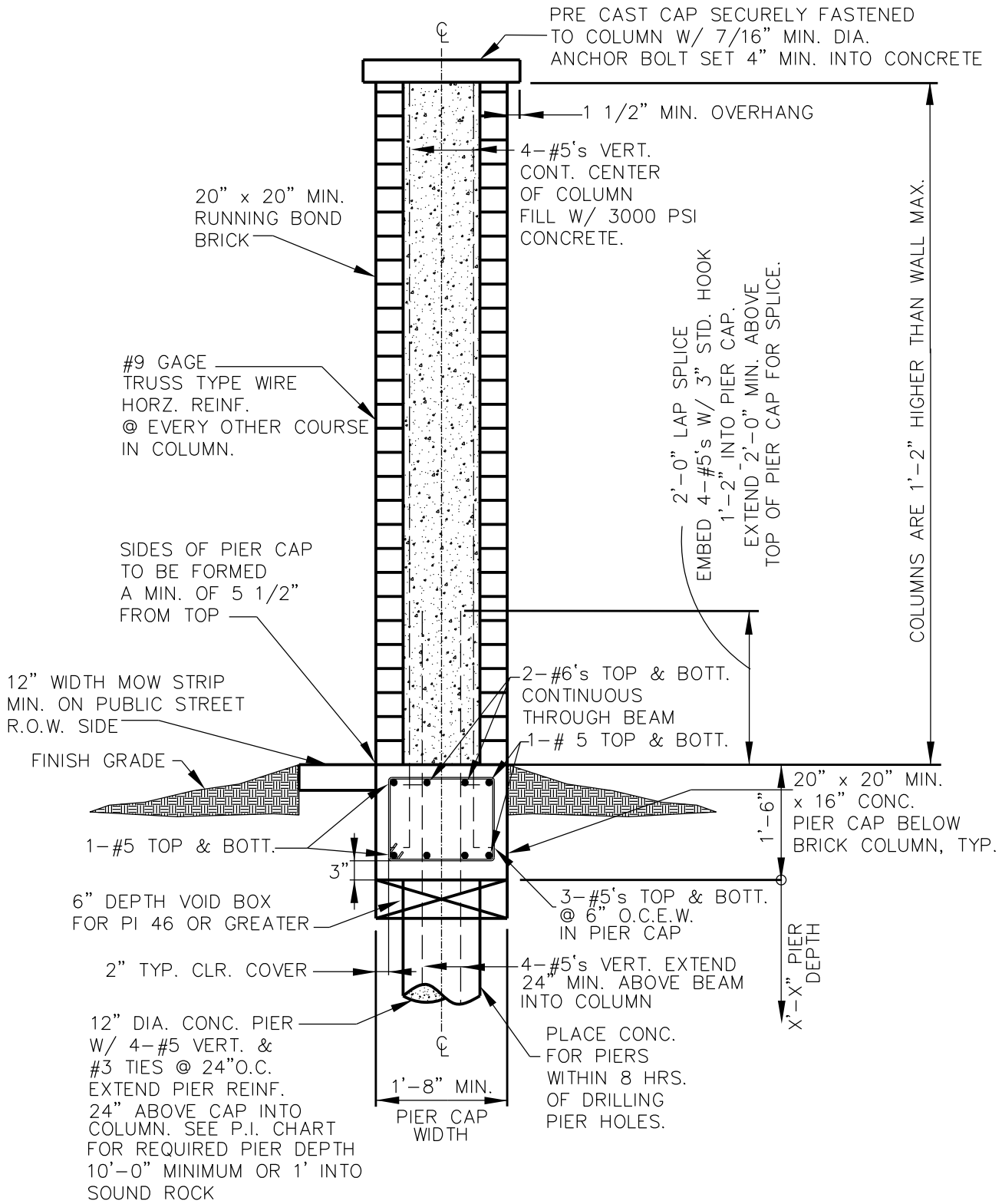

DOUBLE- WYTHE BRICK WALL COLUMN SECTION W/ GRADE BEAM

8/11

Revision Date: 06/14/10

Scale : N/A Date : 06/01/05	GARLAND ENGINEERING STANDARD DETAILS	DOUBLE-WYTHE BRICK WALL COLUMN SECTION WITH GRADE BEAM
Design :		
Drawn : SEL		
Dwg. File : SCWALL_003.DWG		
Project No. : STANDARD-DETAILS		

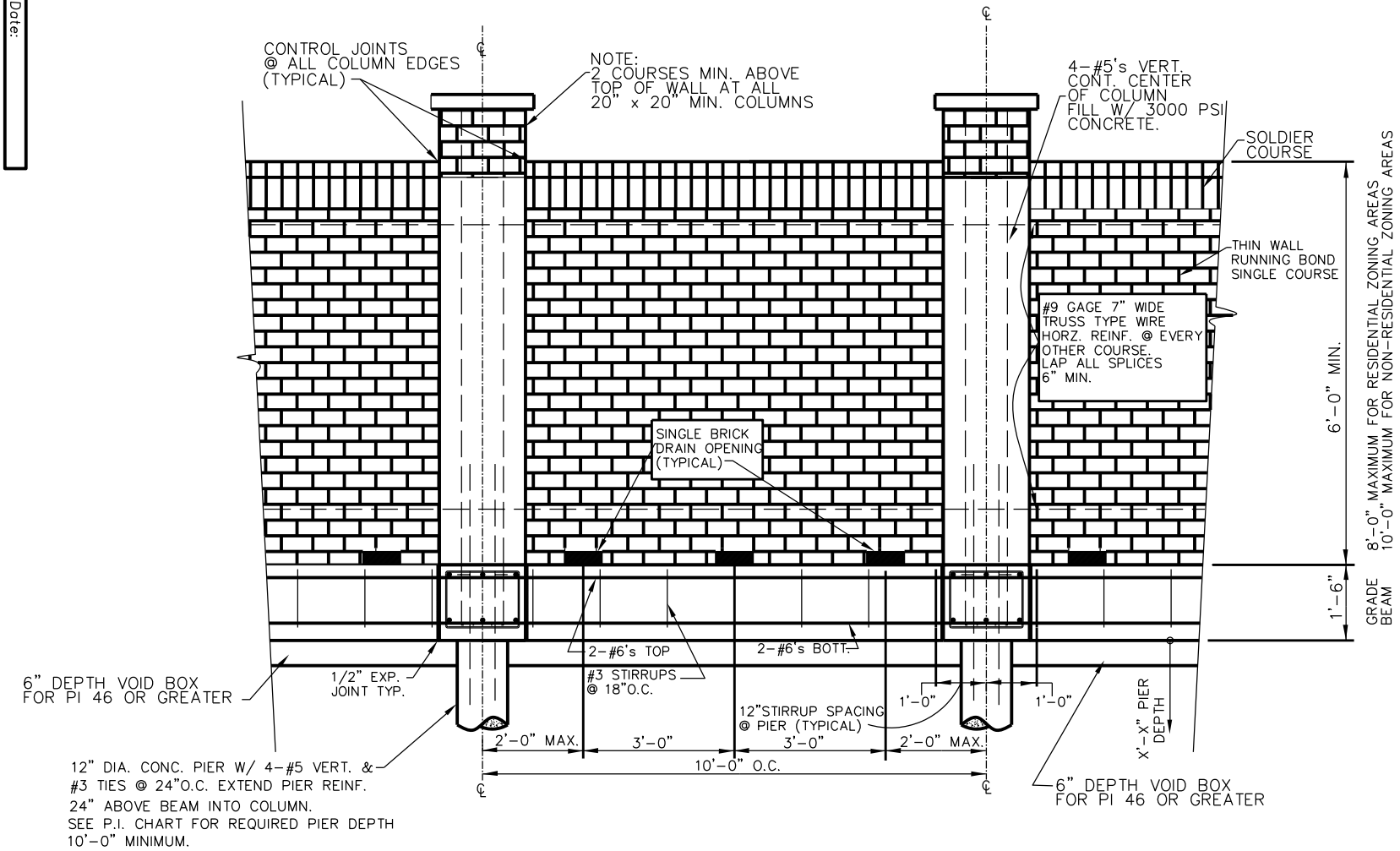

DOUBLE- WYTHE BRICK
WALL PANEL ELEVATION W/ GRADE BEAM

Revision Date:

Scale : N/A Date : 06/01/05
Design :
Drawn : SEL
Dwg. File : SCWALL_003.DWG
Project No. : STANDARD-DETAILS

GARLAND ENGINEERING

STANDARD DETAILS

DOUBLE-WYTHE BRICK
WALL PANEL ELEVATION
WITH GRADE BEAM

9/11

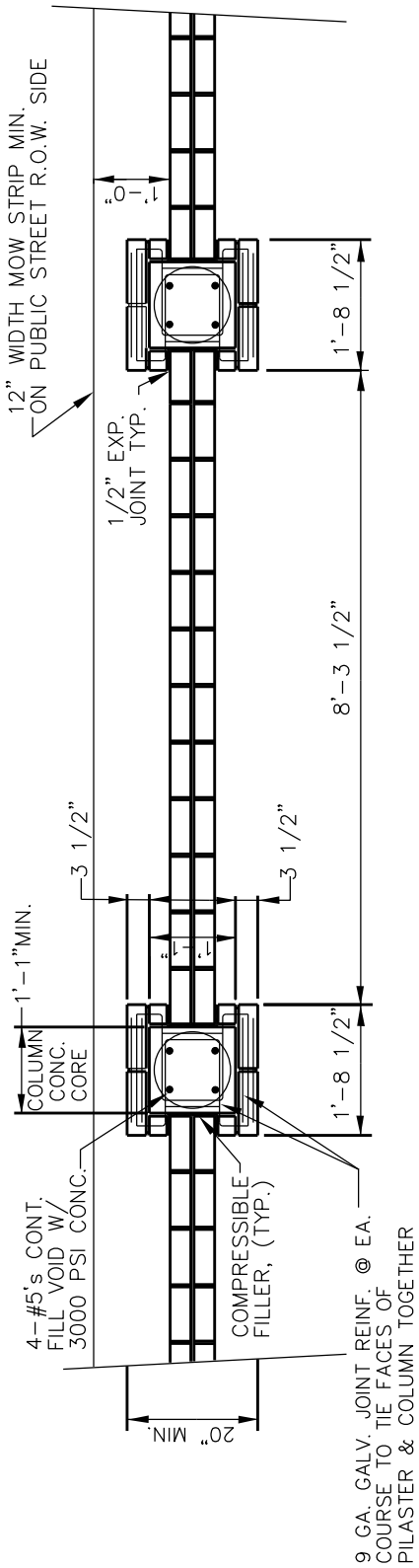

PLAN VIEW
DOUBLE-WYTHE BRICK WALL

10
11

Revision Date:

Scale : N/A Date : 06/01/05	GARLAND ENGINEERING STANDARD DETAILS	PLAN VIEW DOUBLE-WYTHE BRICK WALL
Design :		
Drawn : SEL		
Dwg. File : SCWALL_003.DWG		
Project No. : STANDARD-DETAILS		

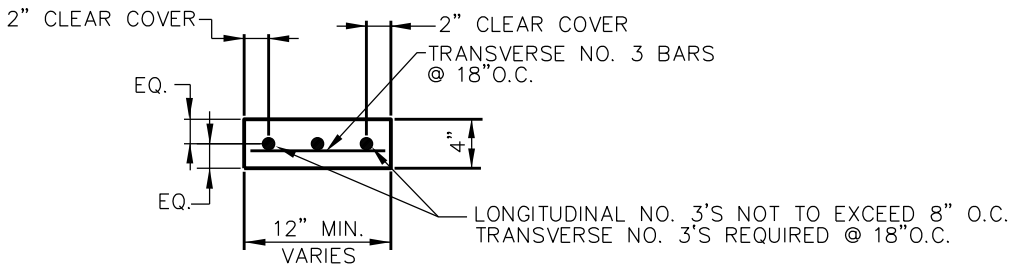

(MOW STRIP REQUIRED AT STREET
R.O.W. SIDE OF WALL)

MOW STRIP DETAIL

COLUMN DIMENSIONS SHOWN ARE
BASED ON KING SIZE BRICK. OTHER
BRICK SIZES MAY BE USED SUBJECT
TO CITY APPROVAL. MAINTAIN
MINIMUM DIMENSIONS.

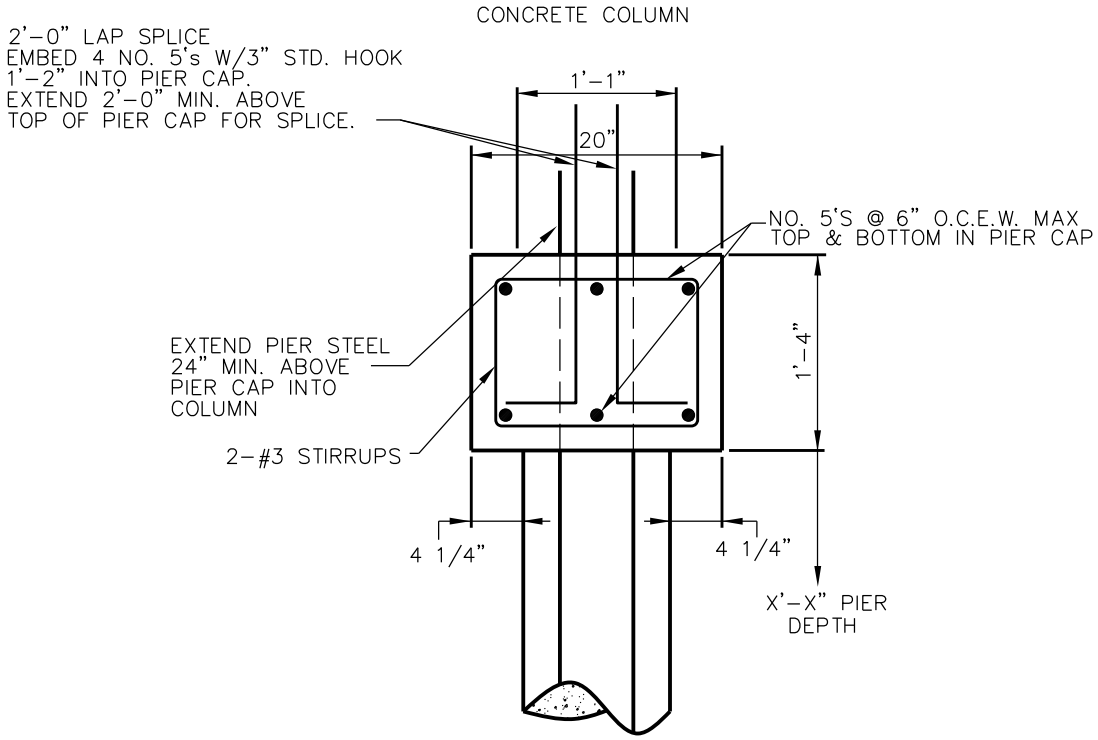

PIER CAP DETAIL

NOTE:
USE 3/8" MORTAR JOINTS TYP.

11/11

Revision Date: 07/07

Scale : N/A Date : 06/01/05	GARLAND ENGINEERING STANDARD DETAILS	MOW STRIP DETAIL & PIER CAP DETAIL
Design :		
Drawn : SEL		
Dwg. File : SCWALL_003.DWG		
Project No. : STANDARD-DETAILS		

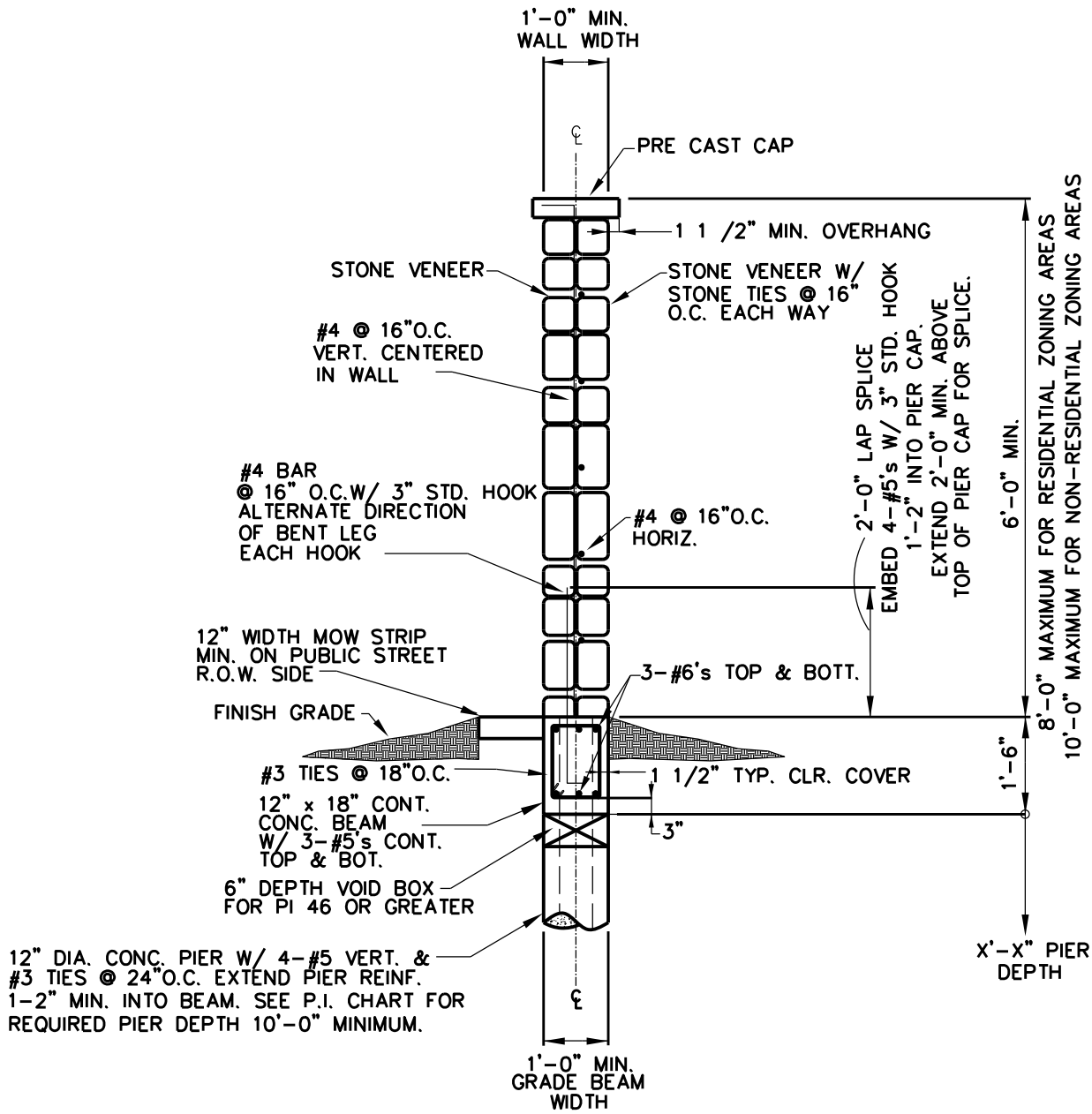

STONE VENEER WALL SECTION WITH GRADE BEAM

1/5

Revision Date:			
Scale : N/A Date : 06/01/05	GARLAND ENGINEERING STANDARD DETAILS	STONE VENEER WALL SECTION WITH GRADE BEAM	PAGE 27
Design :			
Drawn : SEL			
Dwg. File : SCWALL_004.DWG			
Project No. : STANDARD-DETAILS			

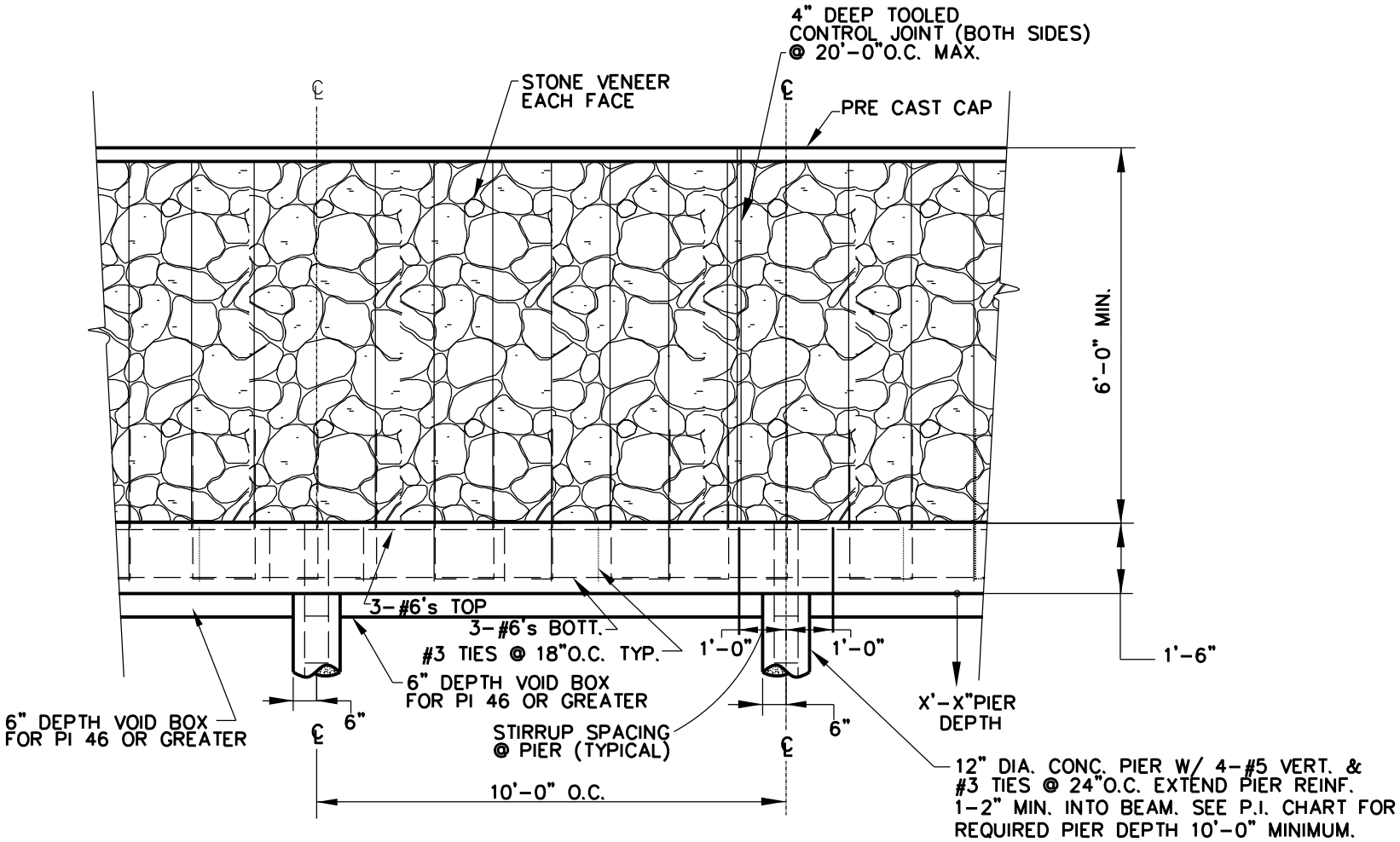

STONE VENEER WALL WITH GRADE BEAM

NOTE: STONE PATTERN MAY VARY FROM THAT SHOWN.
VERIFY WITH ARCHITECTURAL PLANS BEFORE CONSTRUCTION.
ALL STRUCTURAL BEAMS, PIERS, AND REINFORCING SHALL
REMAIN AS SHOWN.

2/5

Revision Date:

Scale : N/A Date : 06/01/05
Design :
Drawn : SEL
Dwg. File : SCWALL_004.DWG
Project No. : STANDARD-DETAILS

GARLAND ENGINEERING
STANDARD DETAILS

STONE VENEER WALL
WITH GRADE BEAM

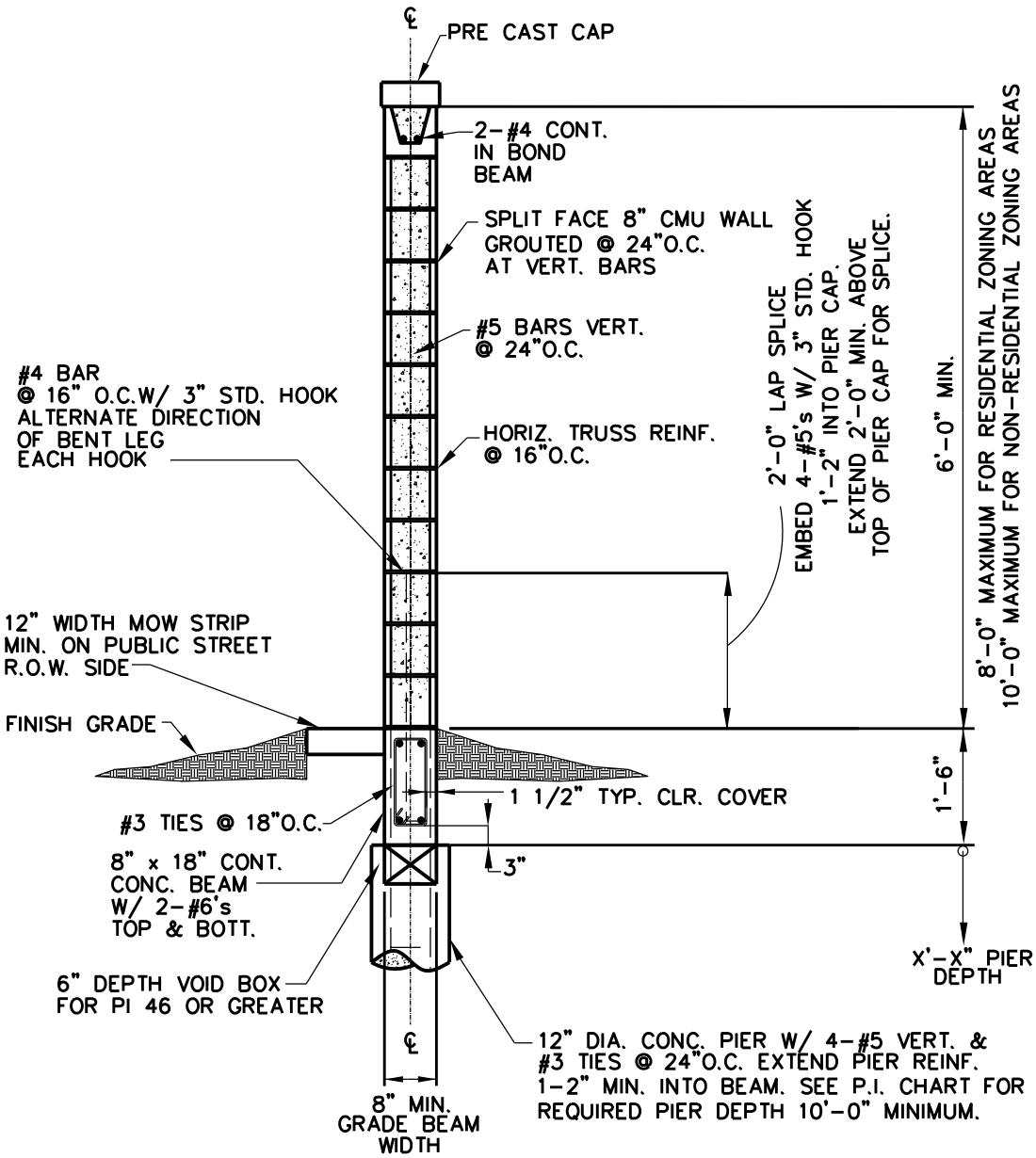

CMU WALL WITH GRADE BEAM

3/5

Revision Date:			
Scale : N/A Date : 06/01/05	GARLAND ENGINEERING STANDARD DETAILS	CMU WALL WITH GRADE BEAM	PAGE 29
Design :			
Drawn : SEL			
Dwg. File : SCWALL_004.DWG			
Project No. : STANDARD-DETAILS			

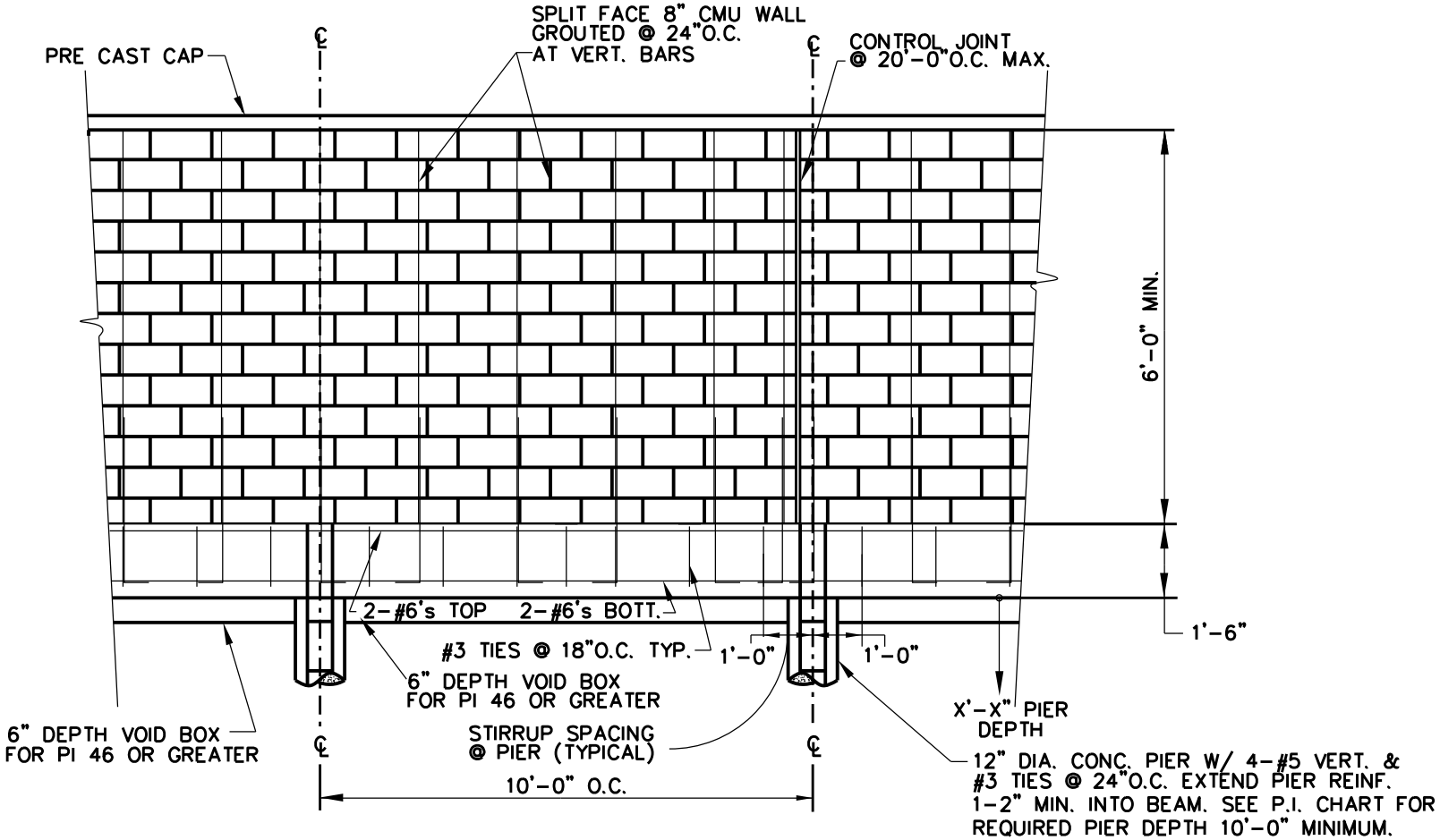

CMU WALL WITH GRADE BEAM

NOTE: MATERIALS FOR THE CMU WALL ARE SUBJECT TO APPROVAL BY THE PLANNING AND BUILDING INSPECTIONS DEPARTMENTS.

4/5

Revision Date:

Scale : N/A Date :06/01/05
Design :
Drawn : SEL
Dwg. File : SCWALL_004.DWG
Project No. : STANDARD-DETAILS

GARLAND ENGINEERING
STANDARD DETAILS

CMU WALL WITH GRADE BEAM

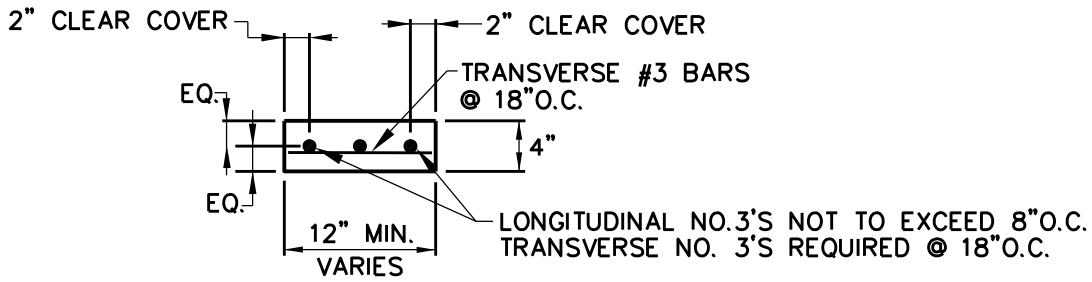

(MOW STRIP REQUIRED AT STREET
R.O.W. SIDE OF WALL)

MOW STRIP DETAIL

5
5

Revision Date: 07/07

Scale : N/A Date : 06/01/05	GARLAND ENGINEERING STANDARD DETAILS	MOW STRIP DETAIL	PAGE 31
Design :			
Drawn : SEL			
Dwg. File : SCWALL_004.DWG			
Project No. : STANDARD-DETAILS			

GENERAL NOTES FOR SCREENWALLS

1. ALL CONCRETE IS CLASS "A" @ 28 DAYS
2. ALL REINFORCING STEEL BARS ARE TO BE ASTM A-615-GRADE 60
3. ALL MORTAR JOINTS ARE TO BE 3/8" TOOLED CONCAVE TYPE. RAKED JOINTS ARE NOT PERMITTED.
4. ALL WALLS SHALL BE A MINIMUM OF SIX FEET IN HEIGHT AND A MAXIMUM OF EIGHT FEET IN HEIGHT FOR RESIDENTIAL ZONING AND TEN FEET IN HEIGHT FOR NON RESIDENTIAL ZONING AS MEASURED FROM THE HIGHEST ADJACENT SIDEWALK, ALLEY, OR GRADE LEVEL.
5. ALL 9 GAGE MASONRY REINFORCING SHALL BE HOT DIP GALVANIZED ASTM A153 CLASS B2 WITH 1.5 OZ. PER SQUARE FOOT ZINC COATING. LAP ALL 9 GAGE SPLICES 6" MIN. PROVIDE 5/8" MORTAR COVER MINIMUM.
6. ALL BRICK SHALL BE 3000 PSI FACING BRICK EXPOSURE SW MINIMUM, CONFORMING TO ASTMC 216.
7. ALL MORTAR IS TYPE S OR TYPE M, CONFORMING TO ASTM C270.
8. ALL BRICK, CMU, OR STONE SHALL BE FULLY SUPPORTED BY 3" X 5" X 3/8" GALVANIZED STEEL ANGLE, CONCRETE FOOTING, OR PIER CAP.
9. THESE STANDARDS ARE FOR SCREENING WALLS WHICH ARE REQUIRED BY THE CITY OF GARLAND SCREENING AND LANDSCAPE STANDARDS. PRIVACY FENCES ARE REGULATED BY A SEPERATE CITY ORDINANCE.

1
1

Revision Date:

Scale : N/A Date : 06/01/05	GARLAND ENGINEERING STANDARD DETAILS	GENERAL NOTES	PAGE 32
Design :			
Drawn : SEL			
Dwg. File : SCWALL_004.DWG			
Project No. : STANDARD-DETAILS			

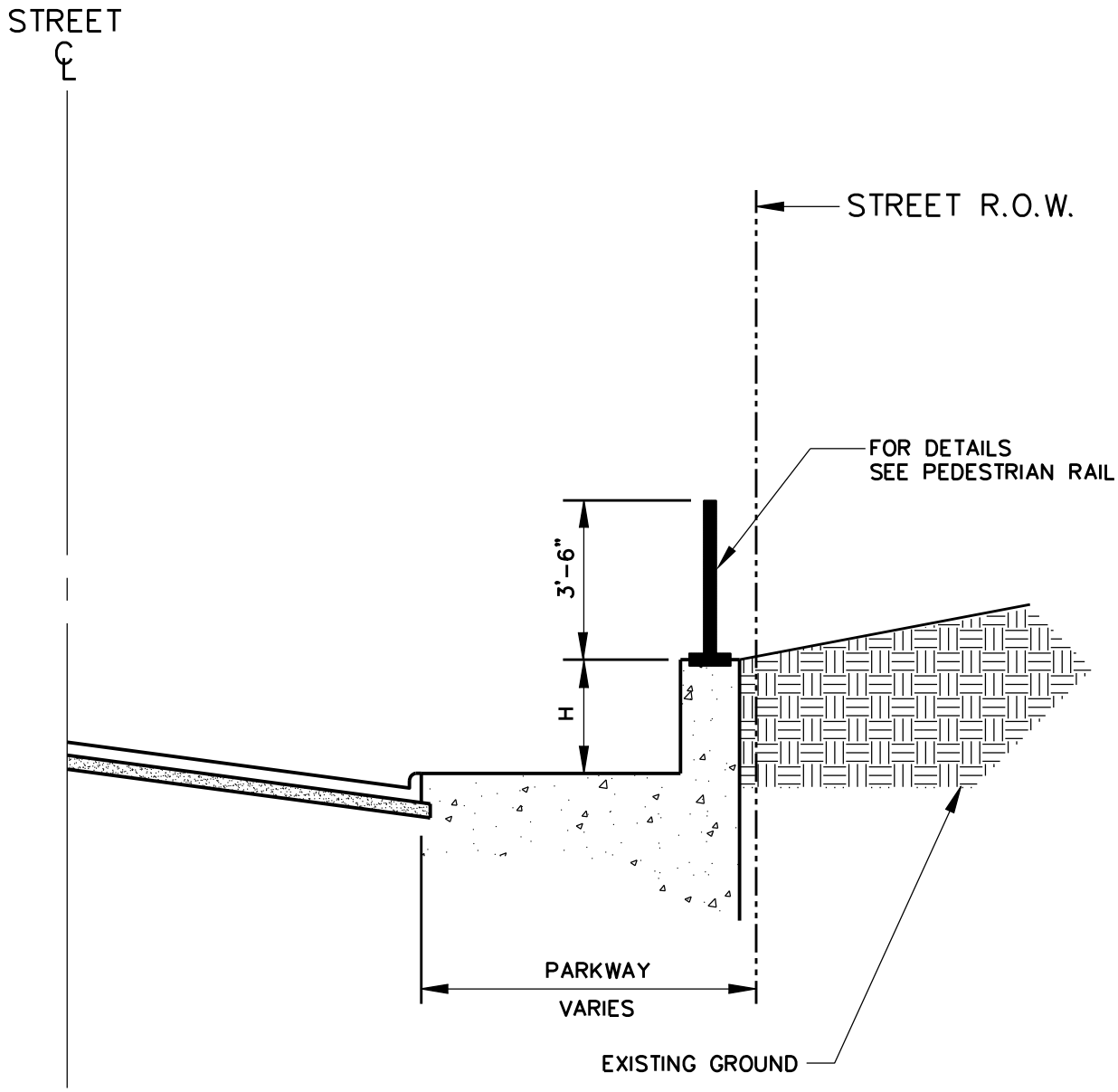

H: WHERE A GRADE DIFFERENTIAL OF 2'-6" OR GREATER EXISTS ALONG PUBLIC SPACES, PEDESTRIAN RAIL OR HANDRAIL IS REQUIRED A MINIMUM OF 3'-6" IN HEIGHT.

1/1

Revision Date:

Scale : N/A Date : 06/01/05	GARLAND ENGINEERING STANDARD DETAILS	PEDESTRIAN RAIL ADJACENT TO PUBLIC SPACES (CASE 1)	PAGE 33
Design :			
Drawn : GAV			
Dwg. File : SCWALL_005.DWG			
Project No. : STANDARD-DETAILS			

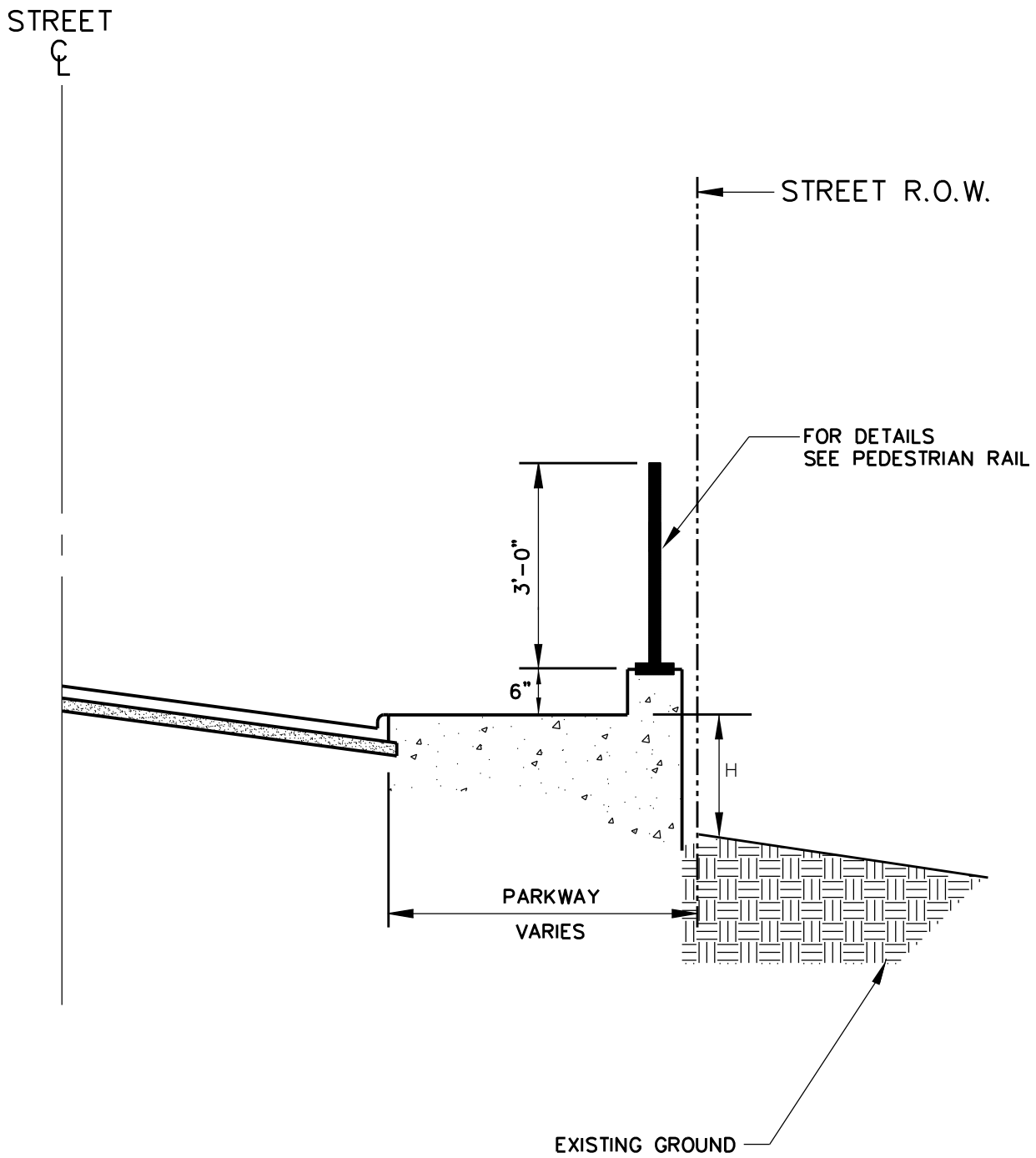

H: WHERE A GRADE DIFFERENTIAL OF 2'-6" OR GREATER EXISTS ALONG PUBLIC SPACES, GUARD FENCE OR HANDRAIL IS REQUIRED A MINIMUM OF 3'-6" IN HEIGHT.

1/1

Revision Date:

Scale : N/A Date : 06/01/05	GARLAND ENGINEERING STANDARD DETAILS	PEDESTRIAN RAIL ADJACENT TO PUBLIC SPACES (CASE 2)	PAGE 34
Design :			
Drawn : GAV			
Dwg. File : SCWALL_005.DWG			
Project No. : STANDARD-DETAILS			

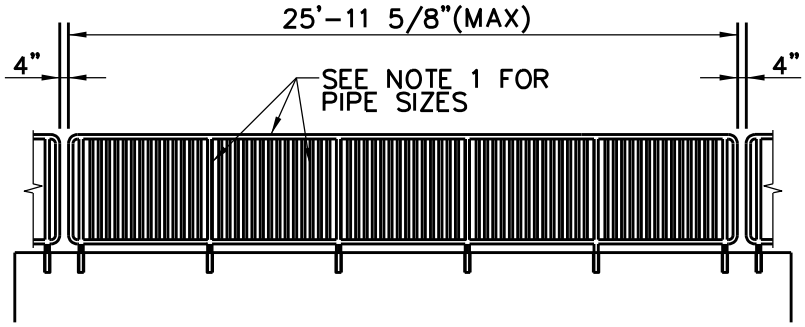

BICYCLE RAIL ELEVATION

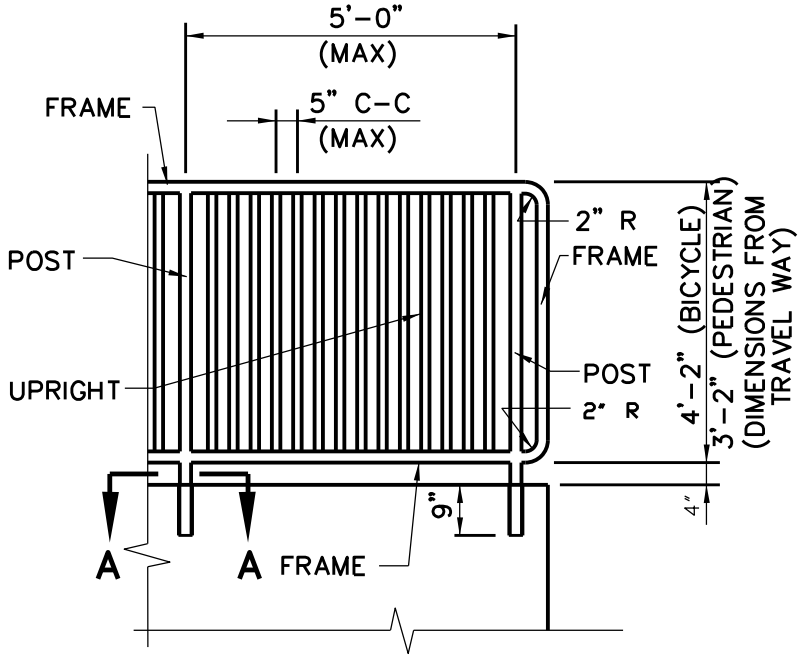

BICYCLE RAIL DETAILS

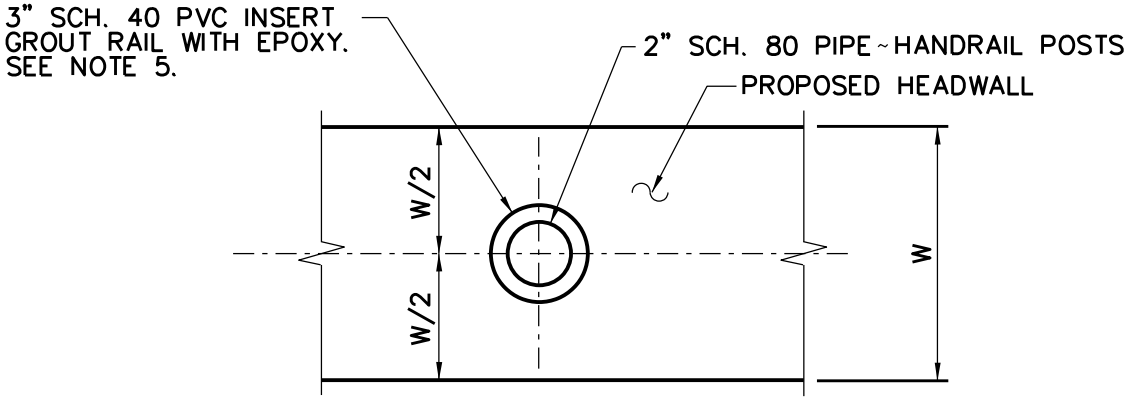

SECTION A-A

CAST-IN-PLACE ATTACHMENT

1/3

Revision Date:		
Scale : N/A Date : 06/01/05	GARLAND ENGINEERING STANDARD DETAILS	PEDESTRIAN/BICYCLE RAIL FOR RETAINING WALL
Design :		
Drawn : GAV		
Dwg. File : SCWALL_006.DWG		
Project No. : STANDARD-DETAILS		

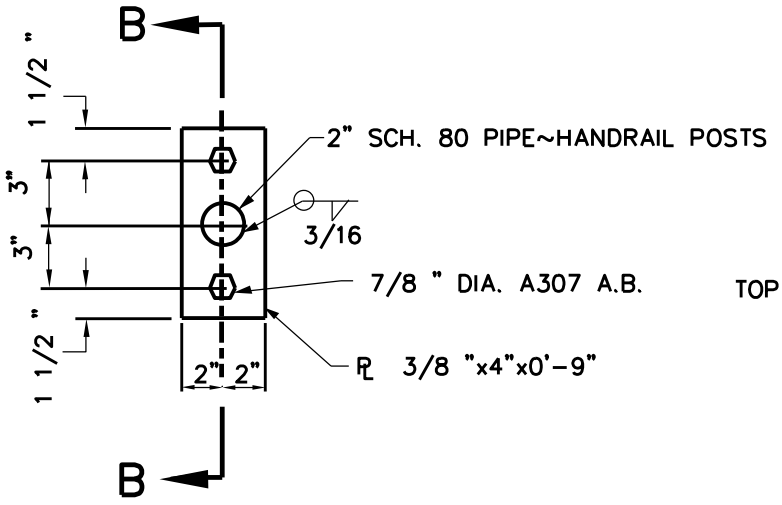

SECTION A-A

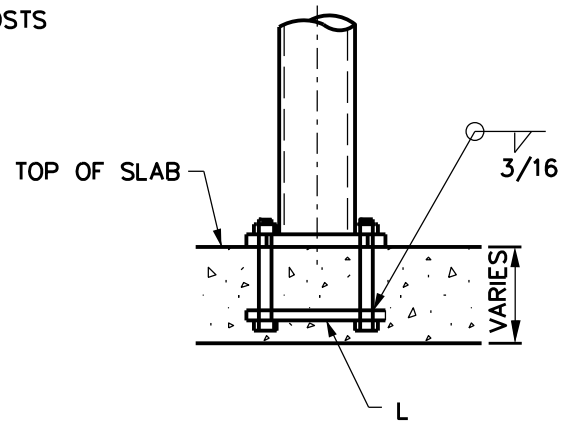

SECTION B-B

BICYCLE RAIL ATTACHMENT TO BRIDGE DECK

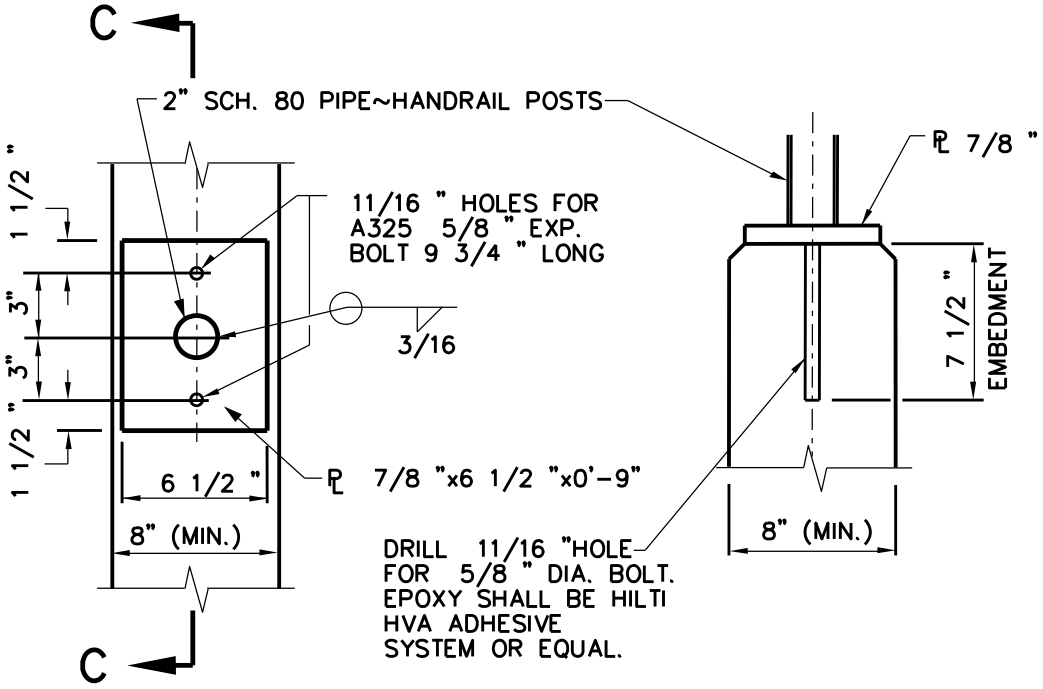

SECTION A-A

SECTION C-C

BOLTED ATTACHMENT

2/3

Revision Date:

Scale : N/A Date : 06/01/05	GARLAND ENGINEERING STANDARD DETAILS	PEDESTRIAN/BICYCLE RAIL FOR RETAINING WALL
Design :		
Drawn : GAV		
Dwg. File : SCWALL_006.DWG		
Project No. : STANDARD-DETAILS		

NOTES:

1. HANDRAIL POSTS SHALL BE 2" SCH. 80 PIPE. HANDRAIL FRAME SHALL BE 2" SCH. 40 PIPE. HANDRAIL UPRIGHTS SHALL BE 1 1/2 " SCH 40 STEEL PIPE.

2. ALL HANDRAIL WELDS MUST BE FULL AND COMPLETE. GRIND SMOOTHLY.

3. ALL HANDRAIL ELEMENTS SHALL BE POWDER COATED.

4. ALL VERTICAL HANDRAIL ELEMENTS SHALL BE PLUMB.

5. ALL EPOXY SHALL BE IN ACCORDANCE WITH TxDOT SPECIFICATION D-9-6100. THE MATERIALS, INSTALLATION, ETC. SHALL BE AS DESCRIBED IN TxDOT "STANDARD SPECIFICATIONS FOR CONSTRUCTION OF HIGHWAYS, STREETS AND BRIDGES", LATEST EDITION, ITEM 575 - CONCRETE ADHESIVES.

6. INSTALLATION OF RAILING IN EXISTING CONCRETE RETAINING WALL WILL BE ACCOMPLISHED BY CORING AND GROUTING (SEE CAST-IN-PLACE ATTACHMENT).

3
3

Revision Date:

Scale : N/A Date : 06/01/05	GARLAND ENGINEERING STANDARD DETAILS	PEDESTRIAN/BICYCLE RAIL FOR RETAINING WALL	PAGE 37
Design :			
Drawn : GAV			
Dwg. File : SCWALL_006.DWG			
Project No. : STANDARD-DETAILS			

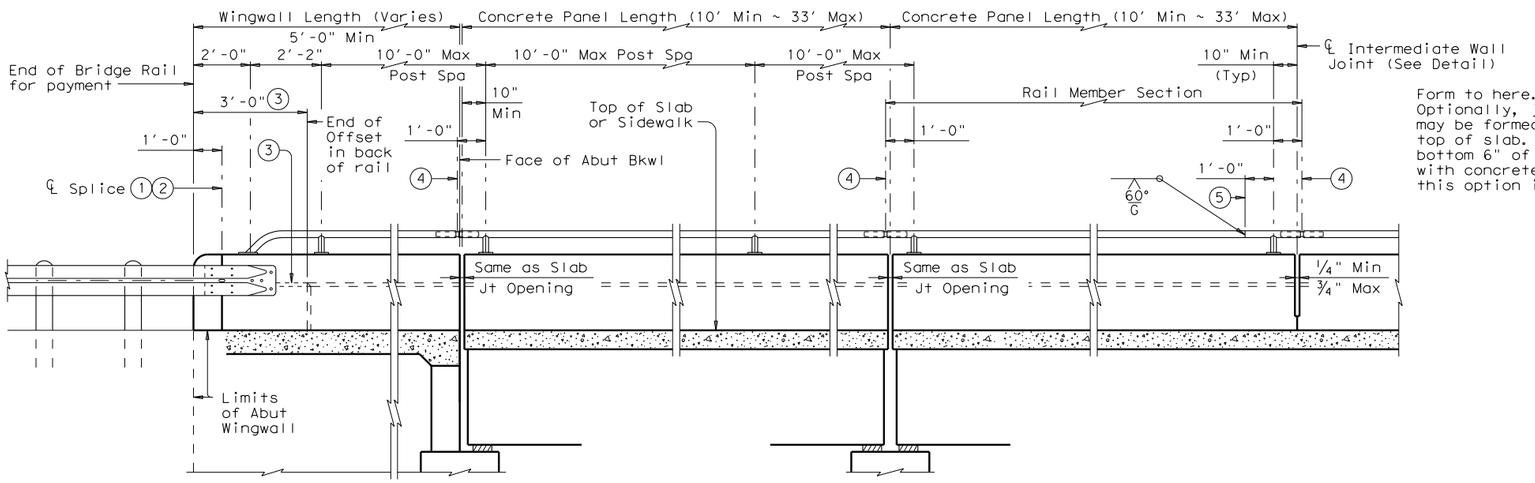

AT ABUTMENT BENTS
Showing TL-2 Transition

AT SLAB EXP JOINTS

AT INTERMEDIATE WALL JOINTS

ROADWAY ELEVATION OF RAIL

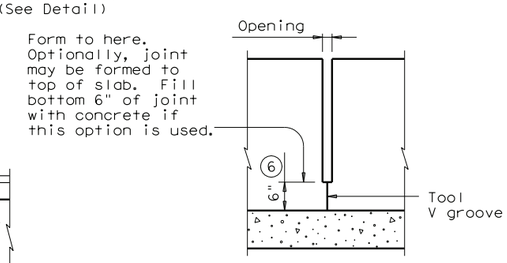

INTERMEDIATE WALL JOINT DETAIL

Note: Provide intermediate wall joints over all slab construction joints, over interior supports on continuous units, and at equal intervals in between as necessary to maintain a 33' maximum length of unbroken wall.

(1) Metal Beam Guard Fence Transitions must be attached to the bridge rail and extended along the embankment unless otherwise shown in the plans.

(2) Terminal Connector and associated hardware are to be paid for under the Item "Metal Beam Guard Fence".

(3) Back of rail offset may, with Engineer's approval be continued to the end of the railing.

(4) ℄ Exp Joint or Splice Joint as required.

(5) One shop splice per rail member section is permitted with minimum 85 percent penetration. The weld may be square groove, or single vee groove. Grind smooth.

(6) Increase 2" for structures with overlay.

(7) Bolts shall be of sufficient length to extend ½" to ¾" beyond nut.

(8) Bolt recesses are only required when pedestrian sidewalks are adjacent to back of rail.

(9) 4 additional Bars R(#5) 3'-8" in length shall be placed inside Bars S(#5) and centered 2'-0" from end of rail when Terminal Connections are required. Field bend as needed.

(10) 2 ½" Std Pipe (2.875" O.D. 0.203" wall thickness)

(11) 2" Std Pipe (2.375" O.D., 0.154" wall thickness)

(12) ⅜" Dia Hole in bottom of pipe or tube (Minimum 1 hole between posts ~ Typ)

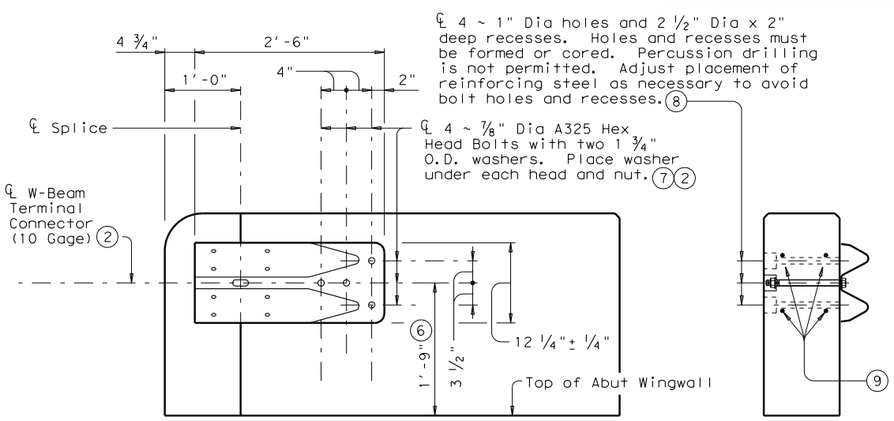

ELEVATION

SECTION

TL-2 TERMINAL CONNECTION DETAILS

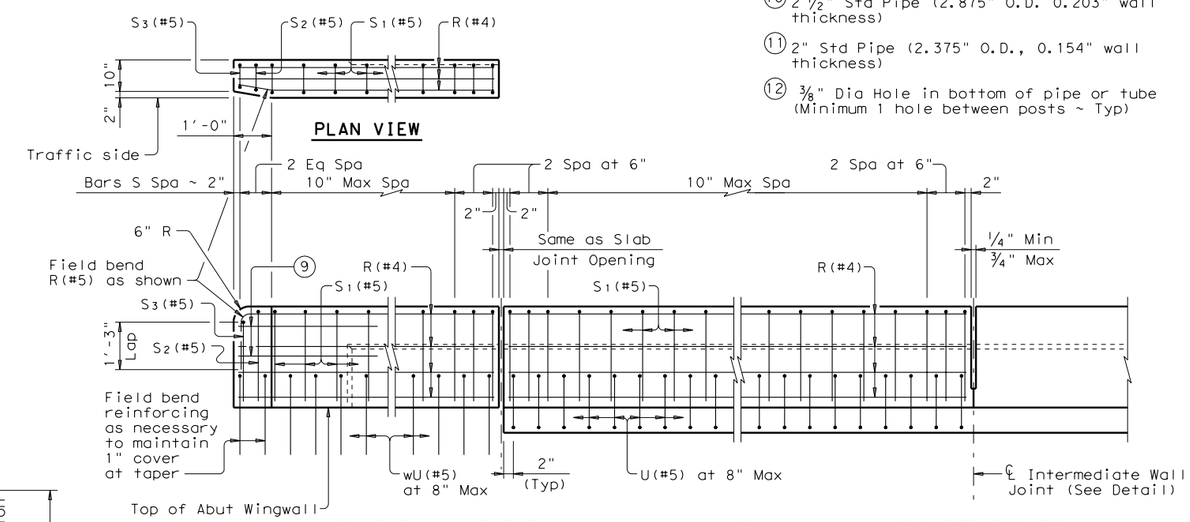

ELEVATION SHOWING TYPICAL REINFORCING PLACEMENT

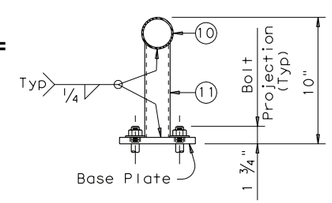

TRANSVERSE SECTION

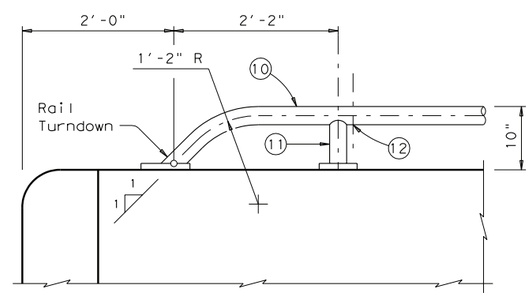

Note that at least two anchor points (as shown) are required for the Bridge Rail on the Abutment Wingwall. Longer Wingwalls may require more than two Rail anchorages.

PIPE RAIL TERMINAL DETAIL

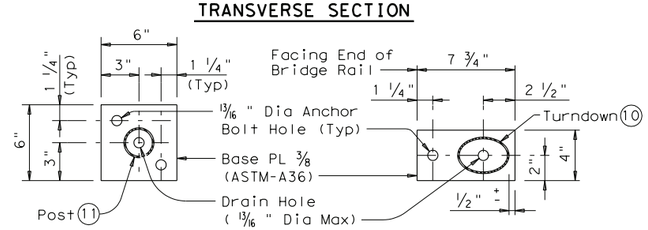

POST BASE PLATE PLAN

RAIL TURNDOWN BASE PLATE PLAN

PIPE RAIL DETAILS

The use of this railing is restricted to design speeds of 45 mph or less.

REVISIONS:
08-06: Changed Base Plate Thickness, Rail Turndown and Rail Turndown Base Plate.

SHEET 1 OF 2

Texas Department of Transportation
Bridge Division

TRAFFIC RAIL

C.O.G. Effective Date 01/08

TYPE C221

FILE: rlstde27.dgn	DN: TxDOT	CK: TxDOT	DW: JTR	CK: TxDOT	
©TxDOT April 2005	DISTRICT	FEDERAL AID PROJECT			SHEET
REVISIONS 03-06: Changed 2'-6" to 2'-2" and removed 1" dimension on Pipe Rail Terminal Detail.	COUNTY		CONTROL	SECT	JOB	HIGHWAY

DISCLAIMER:
The use of this standard is governed by the "Texas Engineering Practice Act". No warranty of any kind is made by TxDOT for any purpose whatsoever. TxDOT assumes no responsibility for the conversion of this standard to other formats or for incorrect results or damages resulting from its use.

ACC:
LEVELS DISPLAYED
1

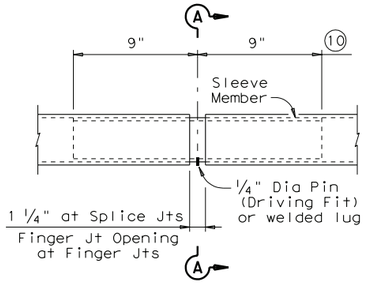

AT SPLICE OR EXP JTS

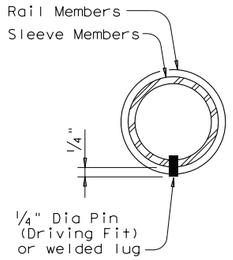

SECTION A-A

The difference between the outside dimension of sleeve and inside dimension of rail member shall not exceed 0.167" before galvanizing. Minimum wall thickness of sleeve shall be 0.120".

PIPE SPLICE DETAILS

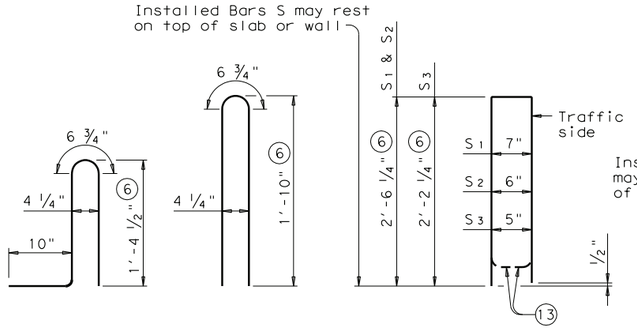

BARS U (#5) BARS wU (#5) BARS S (#5)

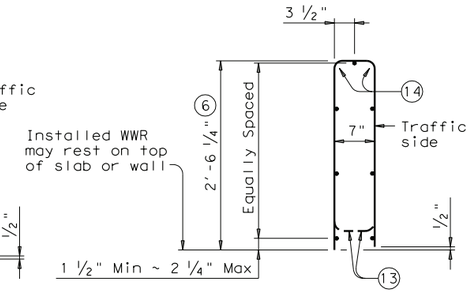

OPTIONAL WELDED WIRE REINFORCEMENT (WWR)

DESCRIPTION	LONGITUDINAL WIRES	VERTICAL WIRES
Minimum (Cumulative Total) Wire Area	0.933 Sq In.	0.248 Sq In. per Ft
	No. of Wires	Spacing
Minimum	7	4"
Maximum	11	12"
Maximum Wire Size Differential	The smaller wire shall have an area of 40% or more of the larger wire.	

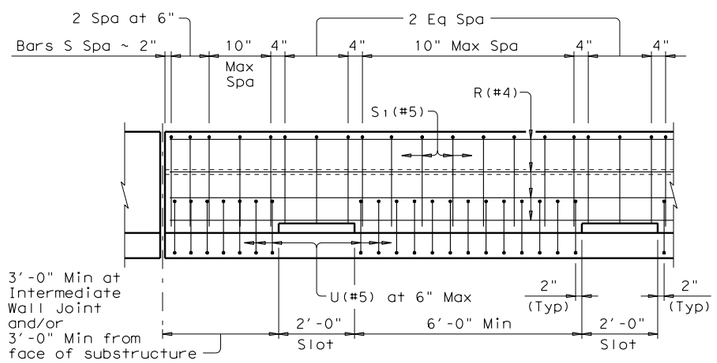

OPTIONAL SIDE SLOT DRAIN DETAIL 15

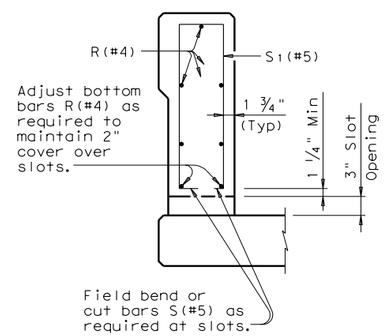

SECTION THRU OPTIONAL SIDE SLOT DRAIN

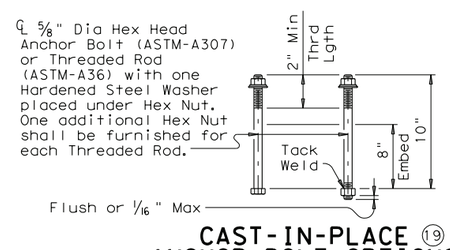

CAST-IN-PLACE 19 ANCHOR BOLT OPTIONS

GENERAL NOTES:

This rail, without the pipe rail, has been evaluated and accepted to be of equal strength to railings with like geometry, which have been crash tested to meet NCHRP Report 350 TL-3 criteria. However, its use is limited to design speeds of 45 mph and less, because the pipe rail presents an occupant compartment intrusion threat to high speed vehicular traffic.

Rail anchorage details shown on this standard may require modification for select structure types. See appropriate details elsewhere in plans for these modifications.

All steel components except reinforcing shall be galvanized unless otherwise shown on plans.

All concrete shall be Class "C".

Chamfer all exposed corners.

All reinforcing shall be Grade 60.

Pipe for pipe rail shall conform to ASTM A53 Grade B or A501.

Erection drawings showing panel lengths, rail post spacing, and anchor bolt setting shall be submitted to the Engineer for approval.

Anchor bolts shall be 5/8" Dia ASTM A36 threaded rods with one hex nut and one hardened steel washer at each bolt. Embed threaded rods into parapet wall with an epoxy anchorage system. Estimated required embedment depth is 3". Core drill holes (percussion drilling not permitted). Anchorage system chosen must be able to achieve an ultimate tensile resistance of 3.9 kips. The Contractor must provide evidence to the Engineer that this can be achieved. Evidence of adequate tensile resistance can be based on the manufacturer's published values of ultimate tensile strength (anchor spacing and edge distance must be accounted for). Anchor installation, including hole size, drilling, and clean-out, must be in accordance with the manufacturer's recommendations.

At the contractor's option anchor bolts may be cast with the parapet (See Cast-in-Place Anchor Bolt Options).

Optional cast-in-place anchor bolts shall be 5/8" Dia ASTM A307 Grade A bolts (or A36 threaded rods with one tack welded hex nut each) with one hex nut and one hardened steel washer at each bolt.

This railing may be constructed with slip-forms when approved by the Engineer, with equipment approved by the Engineer and when epoxy adhesive anchor bolts are used. Slip-forming parapet is not allowed if anchor bolts are cast with parapet wall. Sensor control for both line and grade must be provided. Tack welding to provide bracing for slip-form operations is acceptable. Welding can be performed at a minimum spacing of 3 ft between the cage and the anchorage. It is permissible to weld to U, wU and S bars at any location on the cage. If increased bracing is needed, additional anchorage devices must be added and welding must be performed in the upper two thirds of the cage.

Face of rail, parapet shall be plumb unless otherwise approved by the Engineer. Pipe rail posts shall be square to the top of parapet. Grout may be used under pipe rail post base plates if necessary.

Pipe rail sections shall not include less than two posts, and no more than four (except at Abutments).

Exposed edges of pipe rail and pipe rail posts shall be rounded or chamfered to approximately 1/16" by grinding.

Deformed welded wire reinforcement (WWR) may be used as an option to conventional reinforcement and shall be made in accordance with ASTM A497 (Deformed Wire). Combinations of Reinforcing Steel and WWR or configurations of WWR other than shown will be permitted when the conditions in the table are satisfied and the dimension from end of section to first welded vertical wire does not exceed 3".

Epoxy coat bars U and wU if slab bars are epoxy coated.

Average weight of railing with no overlay: 370 plf (Conc)
10 plf (Steel)

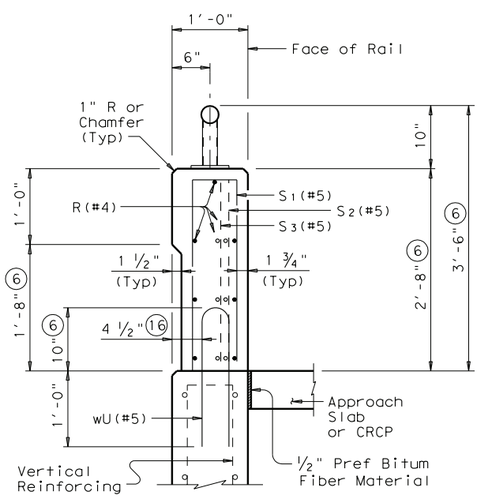

ON ABUTMENT WINGWALLS OR CIP RETAINING WALLS

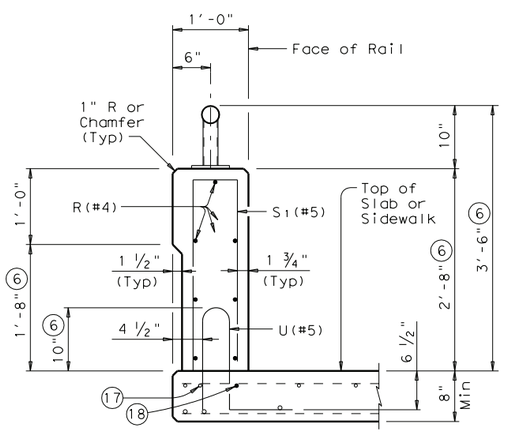

ON BRIDGE SLAB

SECTIONS THRU RAIL

6 Increase 2" for structures with overlay.

10 2 1/2" Std Pipe (2.875" O.D. 0.203" wall thickness)

13 Bend or cut as required to clear drain slots.

14 No longitudinal wires may be within upper bend.

15 Side Slot Drains may be used where shown elsewhere on the plans or as directed by the Engineer. Drains should not be placed over railroad tracks, lower roadways, or sidewalks. When this rail is used as a separator between a roadway surface and a sidewalk surface, side drain slots will not be permitted.

16 5 1/2" when vertical reinforcing has closer clear cover over horizontal reinforcing in abutment wingwalls or retaining walls on traffic side of wall.

17 As an aid in supporting reinforcement, additional longitudinal bars may be used in the slab with the approval of the Engineer. Such bars shall be furnished at the Contractors expense.

18 Top longitudinal slab bar may be adjusted laterally 3" ± to tie reinforcing.

19 See "General Notes" for anchor bolt information.

20 Shop drawings required for tubular steel sections (may be submitted as 11"x 17" prints, provided they are clearly legible).

RAIL DATA FOR HORIZONTAL CURVES

	RADIUS TO FACE OF RAIL	MAX CHORD LENGTH	CONSTRUCT OR FABRICATE
Pipe Rail	Over 2800'	29'-0"	Straight rail panels
	Over 1400' thru 2800'	14'-6"	To required radius or to chords shown 20
	Over 700' thru 1400'	7'-3"	
	Thru 700'	Zero	To required radius 20

REVISIONS:
08-06: Changed Base Plate Thickness, Rail Turndown and Rail Turndown Base Plate.

DISCLAIMER:
The use of this standard is governed by the "Texas Engineering Practice Act". No warranty of any kind is made by TxDOT for any purpose whatsoever. TxDOT assumes no responsibility for the conversion of this standard to other formats or for incorrect results or damages resulting from its use.

ACC:
LEVELS DISPLAYED
1

SHEET 2 OF 2

Texas Department of Transportation
Bridge Division

TRAFFIC RAIL

C.O.G. Effective Date 01/08

TYPE C221

FILE: rlstde27.dgn	DN: TxDOT	CK: TxDOT	DW: JTR	CK: TxDOT
© TxDOT April 2005	DISTRICT	FEDERAL AID PROJECT		SHEET
REVISIONS 03-06: Changed 2'-6" to 2'-2" and removed 1" dimension on Pipe Rail Terminal Detail.	COUNTY	CONTROL	SECT	JOB	HIGHWAY