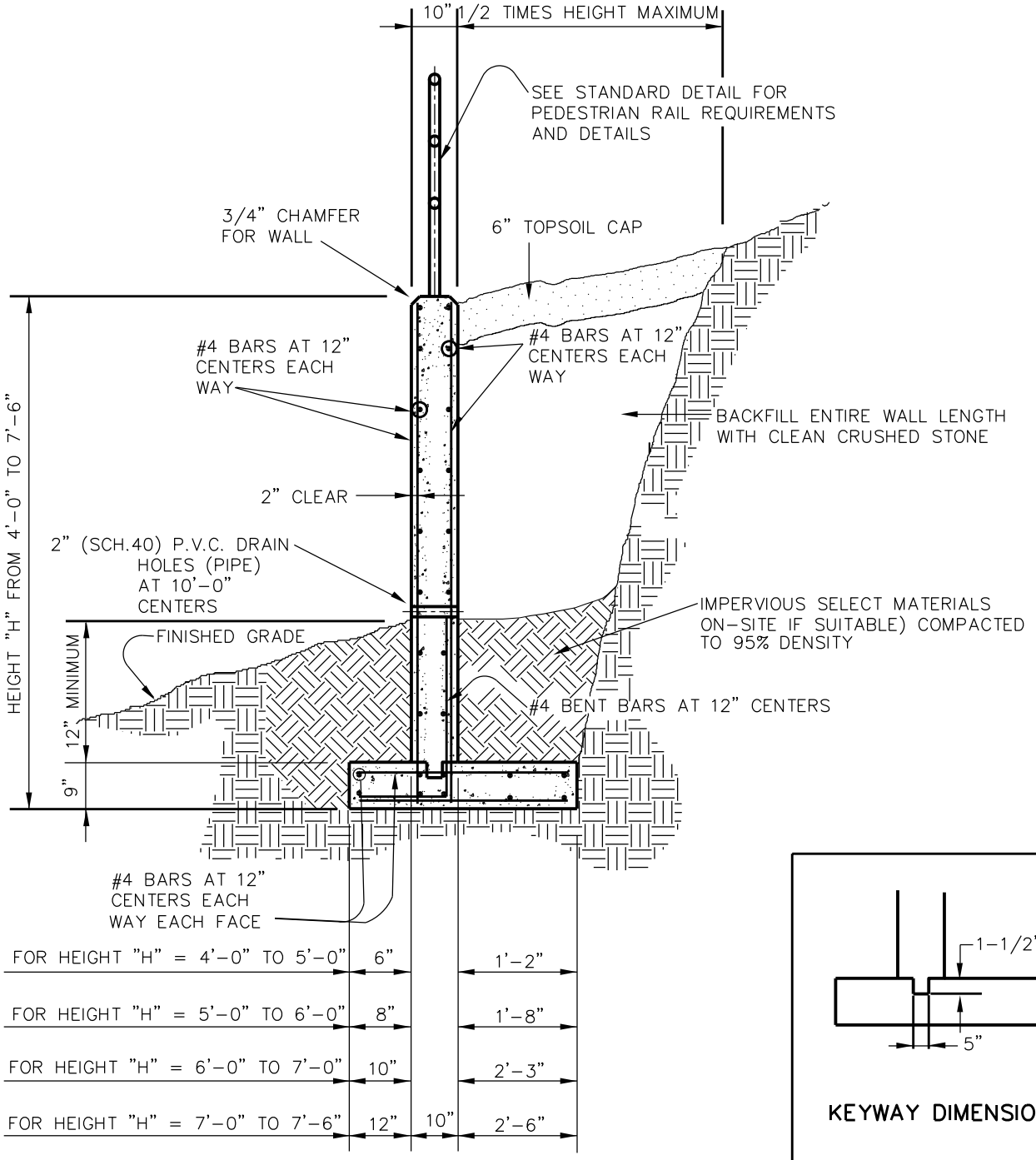

SECTIONAL ELEVATION

1/2

Revision Date:

Scale : N/A Date : 06/01/05	GARLAND ENGINEERING STANDARD DETAILS	STANDARD RETAINING WALL DETAILS TYPE 'A' RETAINING WALL	PAGE 1
Design :			
Drawn : GAV			
Dwg. File : RET_002.DWG			
Project No. : STANDARD-DETAILS			

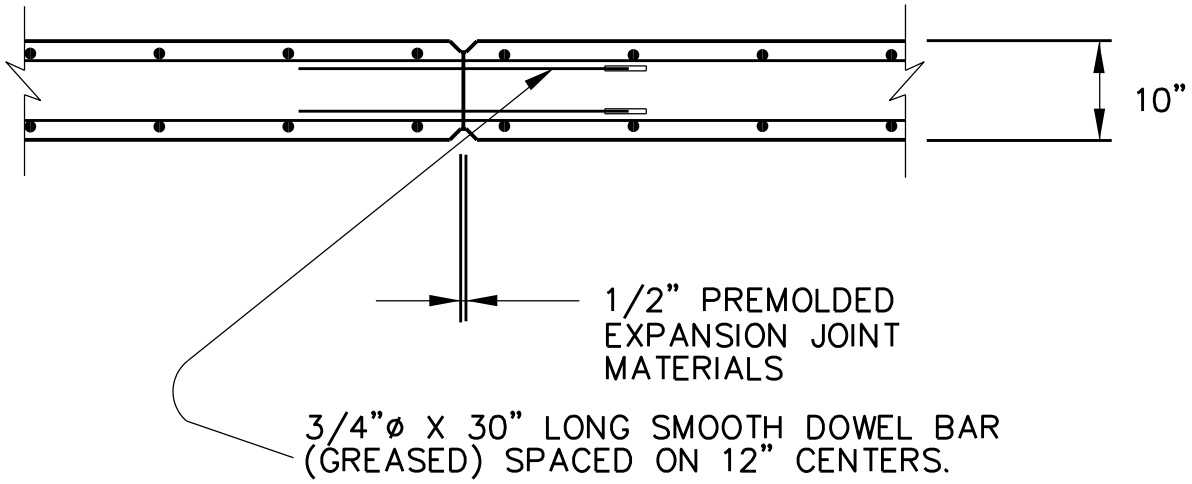

EXPANSION JOINT DETAILS

GENERAL NOTES:

1. ALL EXPOSED EDGES SHALL HAVE A 3/4 INCH CHAMFER.
2. ALL DISTANCES TO REINFORCING BARS REFER TO CLEAR CONCRETE COVER OF BAR UNLESS NOTED OTHERWISE.
3. MINIMUM BAR LAP IS TO BE FORTY (40) BAR DIAMETERS.
4. MINIMUM GRADE OF REINFORCING STEEL IS TO BE ASTM A615 GRADE 60.
5. CLASS "C" CONCRETE
6. MAXIMUM SPACING OF EXPANSION JOINTS SHALL BE 75'-0" CENTER TO CENTER.
7. MINIMUM SURFACE FINISH FOR ALL EXPOSED SURFACES WILL BE A RUBBED FINISH PRODUCED BY RUBBING WITH A CARBORUNDOM STONE.

2/2

Revision Date:

Scale : N/A Date : 06/01/05	GARLAND ENGINEERING	STANDARD RETAINING WALL DETAILS	PAGE
Design :		TYPE 'A' RETAINING WALL	2
Drawn : GAV			
Dwg. File : RET_002.DWG			
Project No. : STANDARD-DETAILS	STANDARD DETAILS		

GENERAL NOTES FOR RETAINING WALLS

1. CONCRETE FOR WALL TYPES A TO D INCLUSIVE SHALL BE CLASS "C".
2. BAR LAPS SHALL BE 30 DIAMETERS.
3. ALL EXPOSED SURFACES EXCEPT DRIVEWAYS AND WALKS SHALL RECIEVE A CARBORUNDUM FINISH.
4. DRIVEWAY AND WALK SHALL RECEIVE A BROOM FINISH.
5. EXPOSED EDGES AND CORNERS TO BE ROUNDED OR CHAMFERED AS INDICATED HEREIN.
6. WEEP HOLES SHALL BE FORMED BY 2" DIA. SCH 40 P.V.C.

* HEIGHT 30" OR ABOVE REQUIRES PEDESTRIAN HANDRAIL SIMILAR TO TYPE A WALL DETAIL.

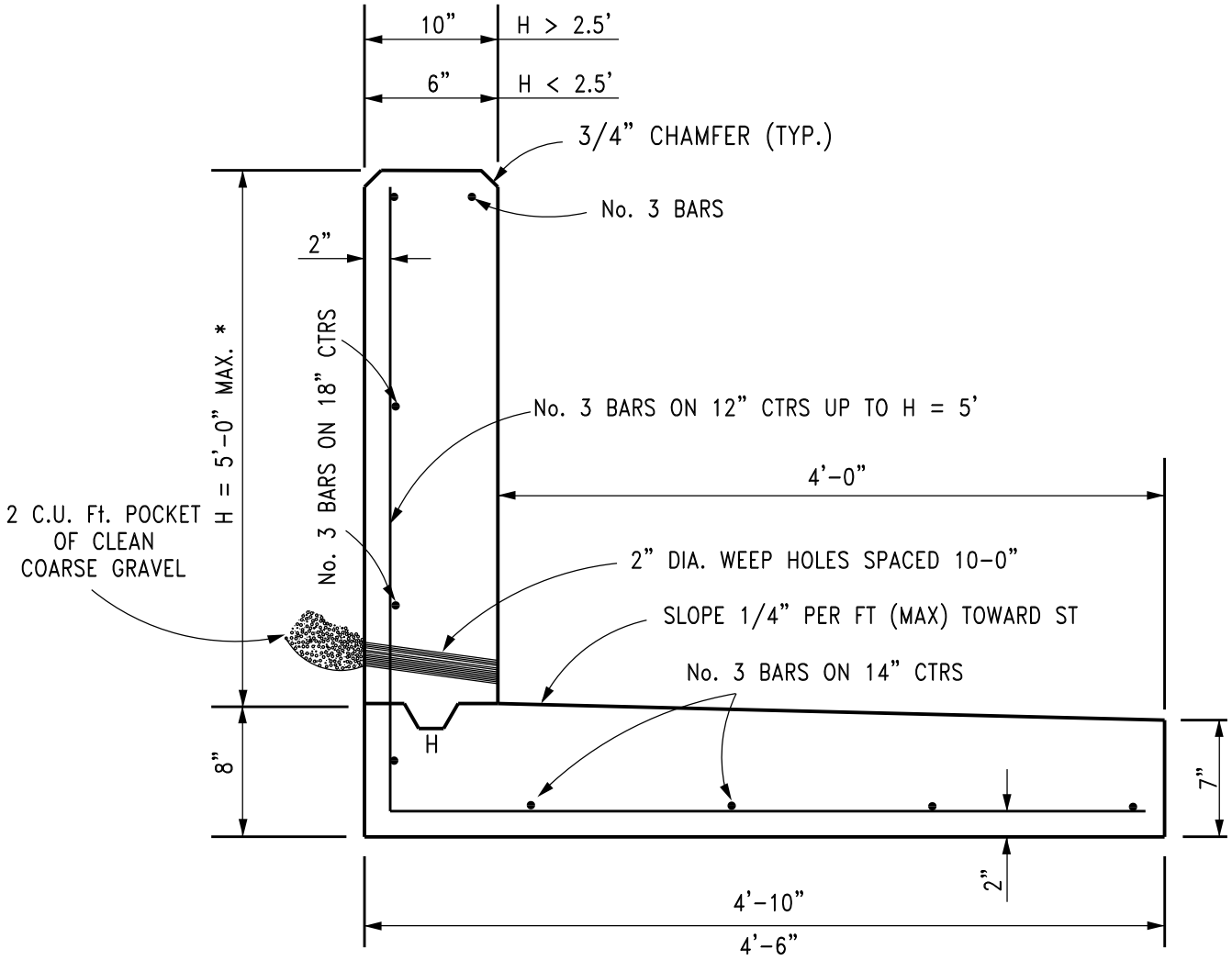

TYPE B RETAINING WALL

(COMBINED WITH SIDEWALK)

1/1

Revision Date:

Scale : N/A Date : 06/01/05	GARLAND ENGINEERING STANDARD DETAILS	RETAINING WALL DETAILS TYPE B	PAGE 3
Design :			
Drawn : JMK			
Dwg. File : RET_001.DWG			
Project No. : STANDARD-DETAILS			

GENERAL NOTES FOR RETAINING WALLS

1. CONCRETE FOR WALL TYPES A TO D INCLUSIVE SHALL BE CLASS "C".
2. BAR LAPS SHALL BE 30 DIAMETERS.
3. ALL EXPOSED SURFACES EXCEPT DRIVEWAYS AND WALKS SHALL RECIEVE A CARBORUNDUM FINISH.
4. DRIVEWAY AND WALK SHALL RECEIVE A BROOM FINISH.
5. EXPOSED EDGES AND CORNERS TO BE ROUNDED OR CHAMFERED AS INDICATED HEREIN.
6. WEEP HOLES SHALL BE FORMED BY 2" DIA. SCH 40 P.V.C.

* HEIGHT 30" OR ABOVE REQUIRES PEDESTRIAN HANDRAIL, SEE TYPE A WALL DETAIL.

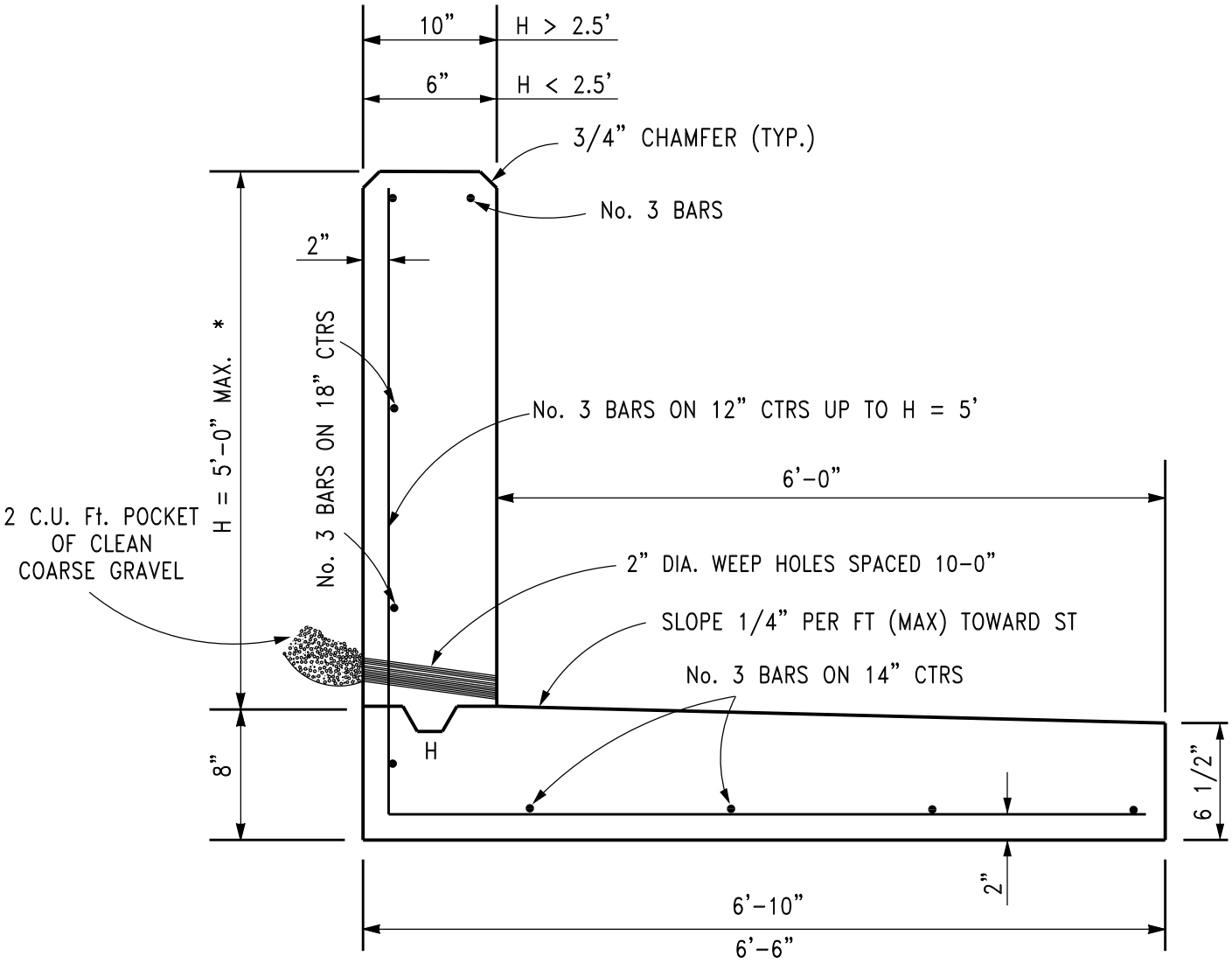

TYPE C RETAINING WALL

(COMBINED WITH SIDEWALK)

1/1

Revision Date:

Scale : N/A Date : 06/01/05	GARLAND ENGINEERING STANDARD DETAILS	RETAINING WALL DETAILS TYPE C	PAGE 4
Design :			
Drawn : JMK			
Dwg. File : RET_001.DWG			
Project No. : STANDARD-DETAILS			

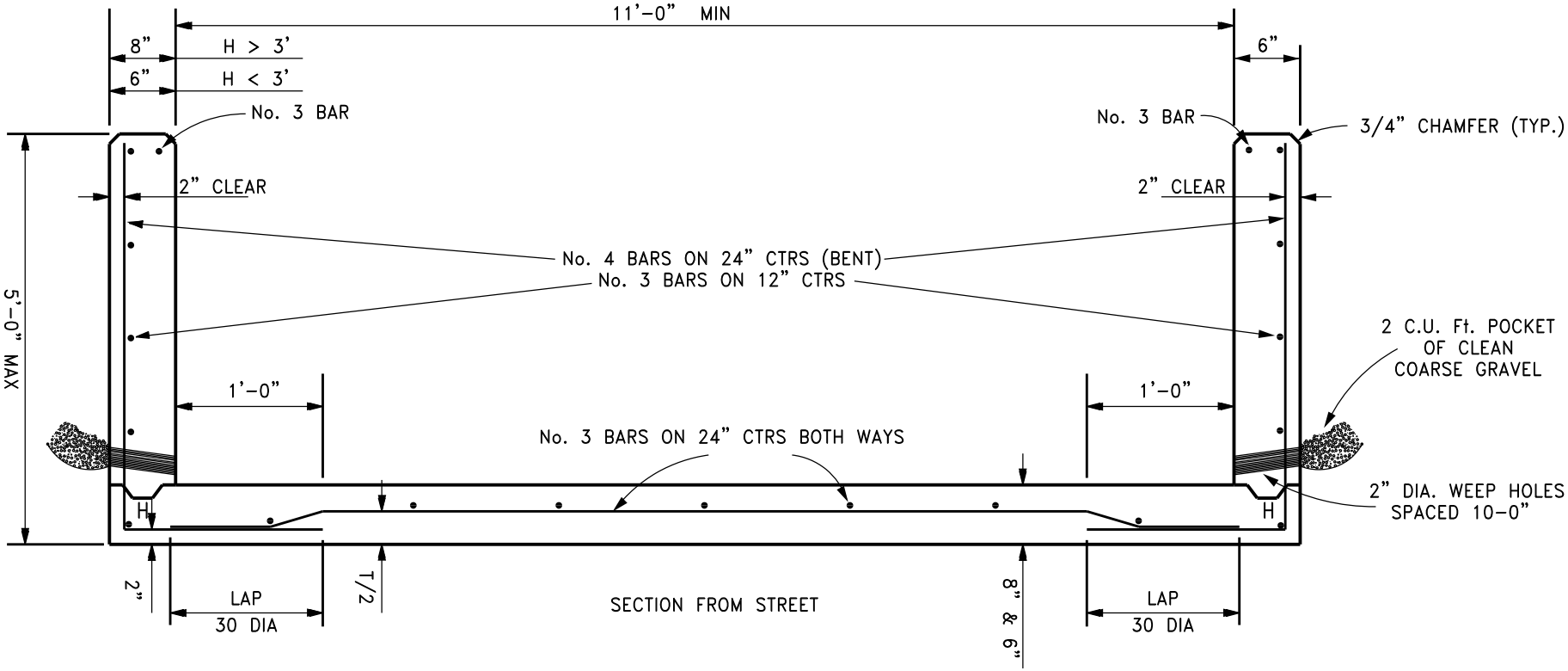

TYPE D RETAINING WALL

1. CONCRETE FOR TYPE D WALL SHALL BE OF THE STRENGTH SPECIFIED ON STREET PAVING PLANS FOR DRIVEWAYS BUT NOT LESS THAN CLASS "C".
2. BAR LAPS SHALL BE 30 DIAMETERS.
3. ALL EXPOSED SURFACES EXCEPT DRIVEWAYS AND WALKS SHALL RECIEVE A CARBORUNDUM FINISH.
4. EXPOSED EDGES AND CORNERS TO BE ROUNDED OR CHAMFERED AS INDICATED HEREIN.
5. WEEP HOLES SHALL BE FORMED BY 2" DIA. SCH. 40 P.V.C.

Revision Date:

Scale : N/A Date : 06/01/05
Design :
Drawn : JMK
Dwg. File : RET_001.DWG
Project No. : STANDARD-DETAILS

GARLAND ENGINEERING
STANDARD DETAILS

RETAINING WALL DETAILS
TYPE D