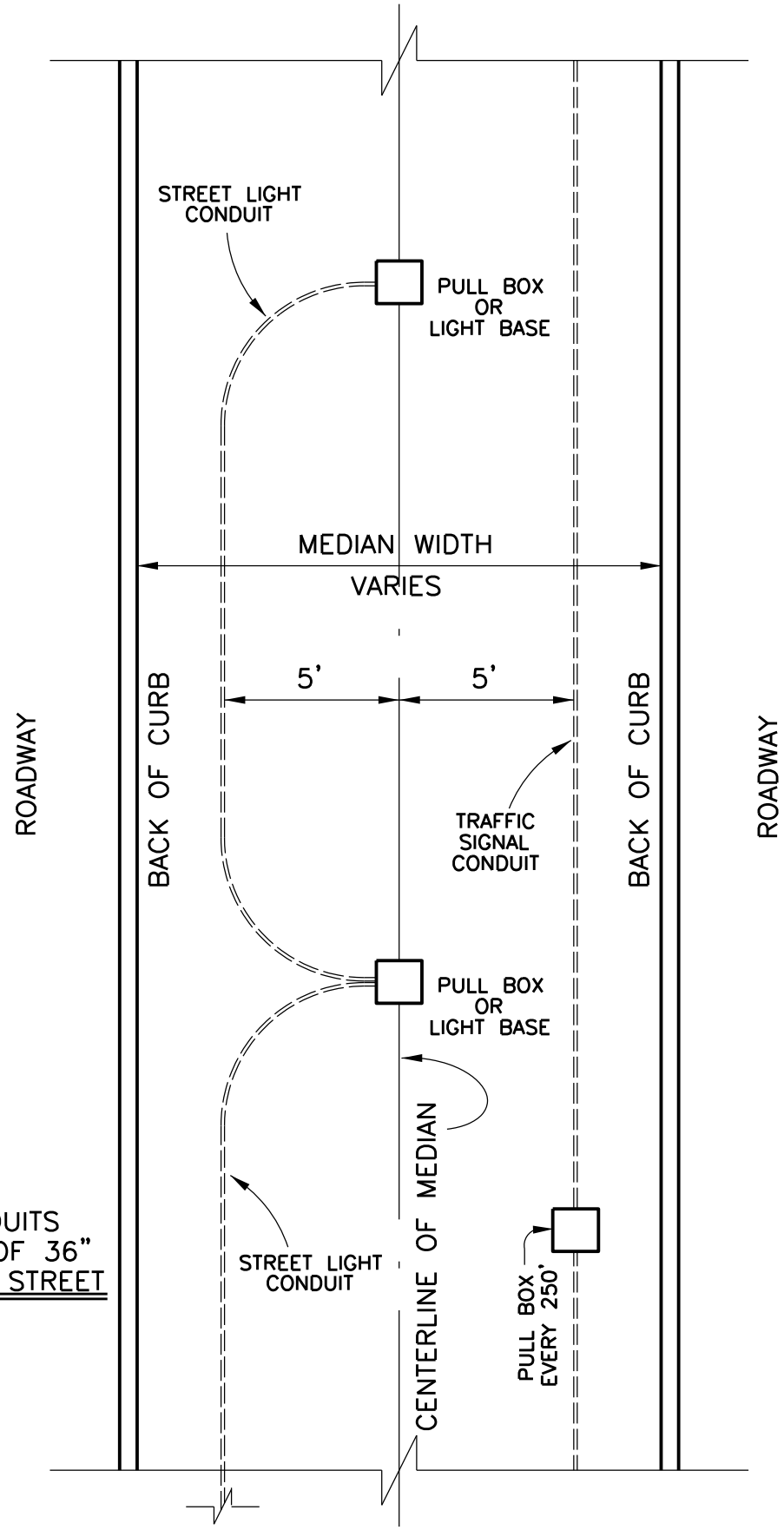

NOTE: ALL CONDUITS TO BE MINIMUM OF 36" BELOW ADJACENT STREET PAVING GRADE

1/1

Revision Date:

Scale : N/A Date : 06/01/05	GARLAND ENGINEERING STANDARD DETAILS	STREET LIGHT & TRAFFIC SIGNAL CONDUIT MEDIAN STANDARD LAYOUT
Design :		
Drawn : JMK		
Dwg. File : MED_001.DWG		
Project No. : STANDARD-DETAILS		

PAGE 1

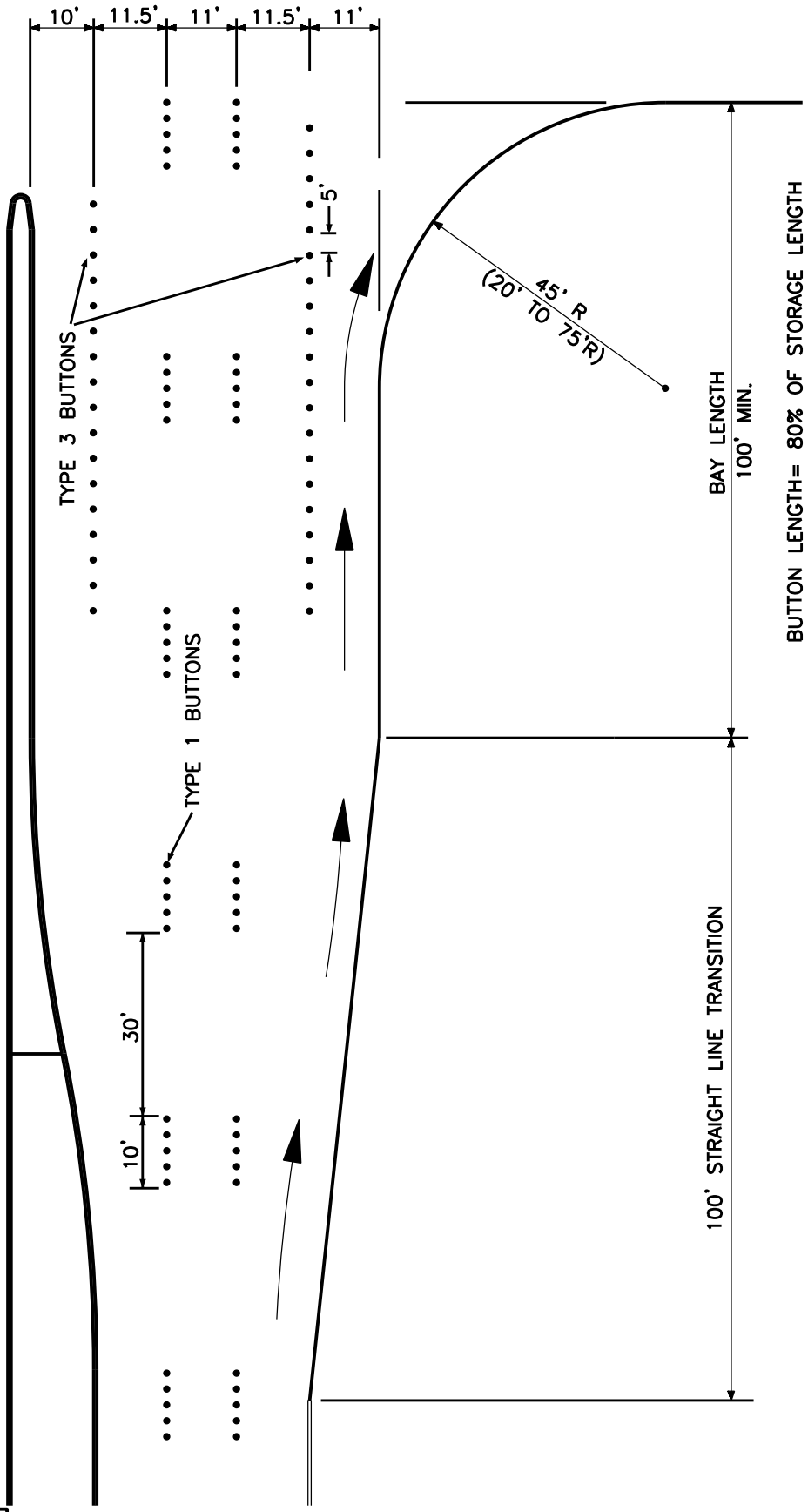

1/2

Revision Date: 06/11

Scale : N/A Date : 06/01/05	GARLAND ENGINEERING STANDARD DETAILS	TYPICAL RIGHT TURN LANE	PAGE 2
Design :			
Drawn : JMK			
Dwg. File : MED_002.DWG			
Project No. : STANDARD-DETAILS			

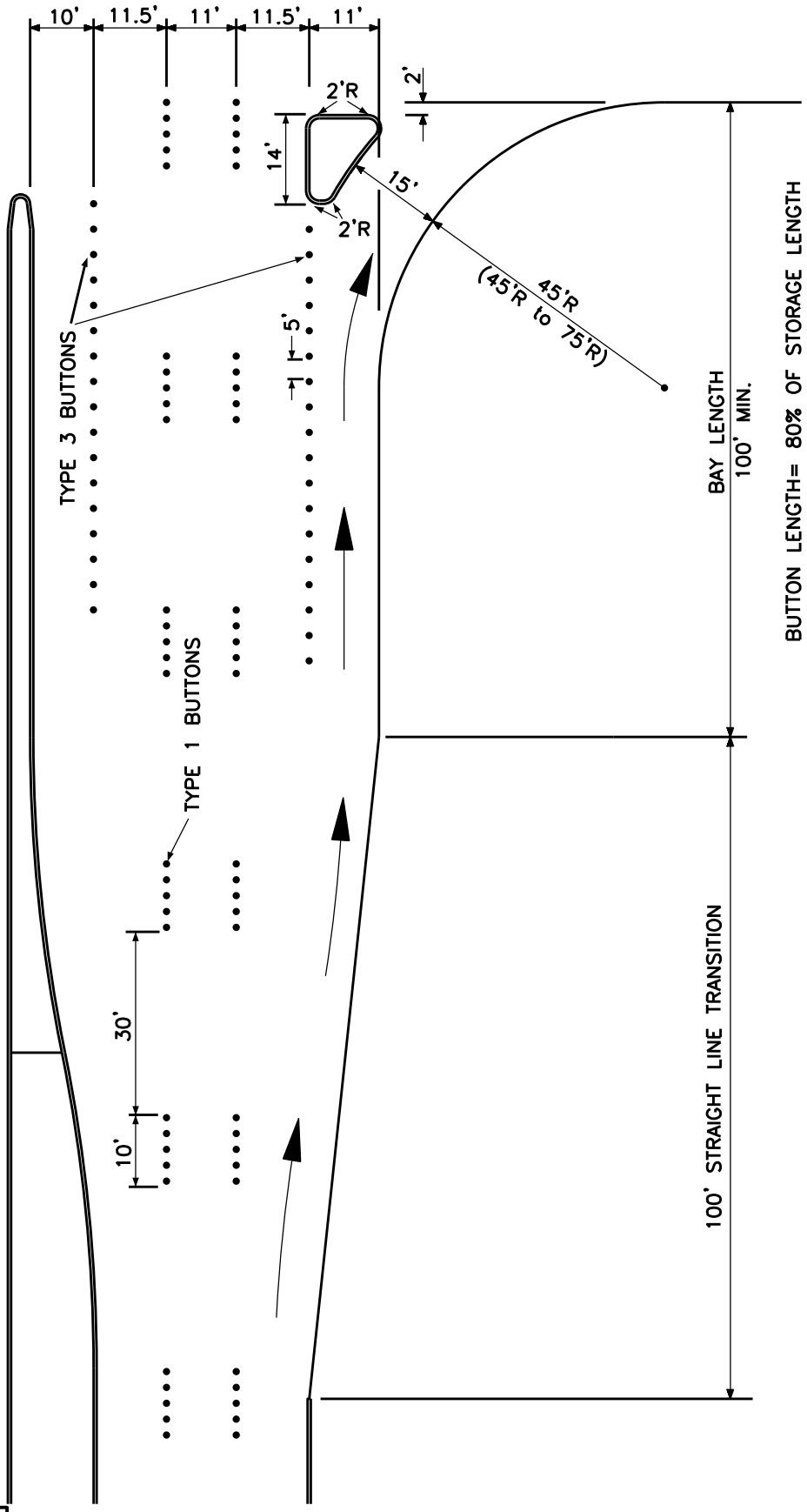

2/2

Revision Date: 06/11

Scale : N/A Date : 06/01/05	GARLAND ENGINEERING STANDARD DETAILS	TYPICAL RIGHT TURN LANE (CONCRETE ISLAND)
Design :		
Drawn : JMK		
Dwg. File : MED_002.DWG		
Project No. : STANDARD-DETAILS		

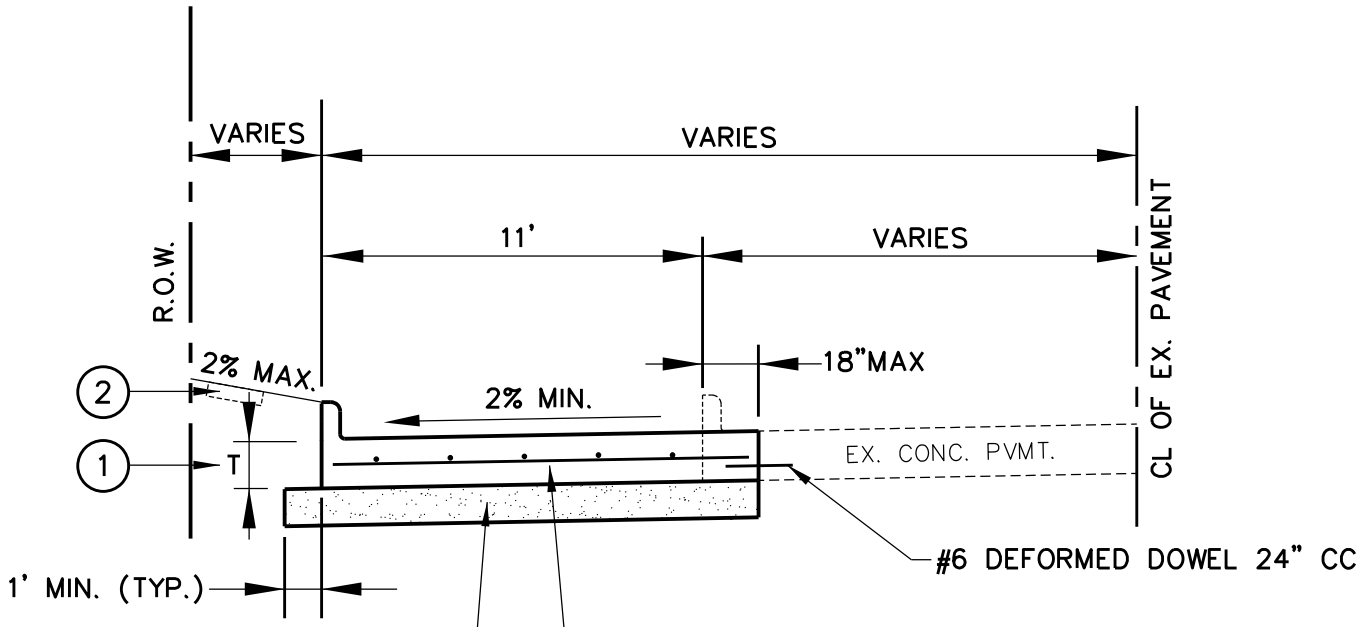

6" LIME/CEMENT STABILIZED SUBGRADE (TYP.)

USE THE FOLLOWING RATIO:

LIME 18# PER SQ.YD.
CEMENT 36# PER SQ.YD.

PROPOSED CLASS "C" REINFORCED CONCRETE PAVEMENT ON 6" LIME/CEMENT STABILIZED SUBGRADE. THE CONTRACTOR MAY INCREASE PAVEMENT THICKNESS BY 2" IN LIEU OF LIME/CEMENT STABILIZATION WITH APPROVAL OF THE ENGINEERING DEPARTMENT.

RIGHT TURN LANE SECTION

NOTES:

1. "T"= 7" COLLECTOR OR 8" ARTERIAL
   ALL REINFORCEMENT SHALL BE #3 BARS ON 24" CENTERS BOTH WAYS, EXCEPT WHERE NOTED.
2. SEE PLAN VIEW FOR SIDEWALK LOCATION.

STABILIZATION OF DISTURBED AREAS PRIOR TO FINAL ACCEPTANCE:

PUBLIC RIGHT-OF-WAY, EASEMENTS, AND COMMON AREAS MUST BE STABILIZED WITH PERENNIAL VEGETATION COVER, FULLY ESTABLISHED WITH 100% COVERAGE, OR OTHER APPROVED STABILIZATION METHOD.

1/1

Revision Date: 11/06

Scale : N/A Date : 11/13/06	GARLAND ENGINEERING STANDARD DETAILS	TYPICAL RIGHT TURN LANE SECTION	PAGE 3a
Design :			
Drawn : JMK			
Dwg. File : MED_002.DWG			
Project No. : STANDARD-DETAILS			

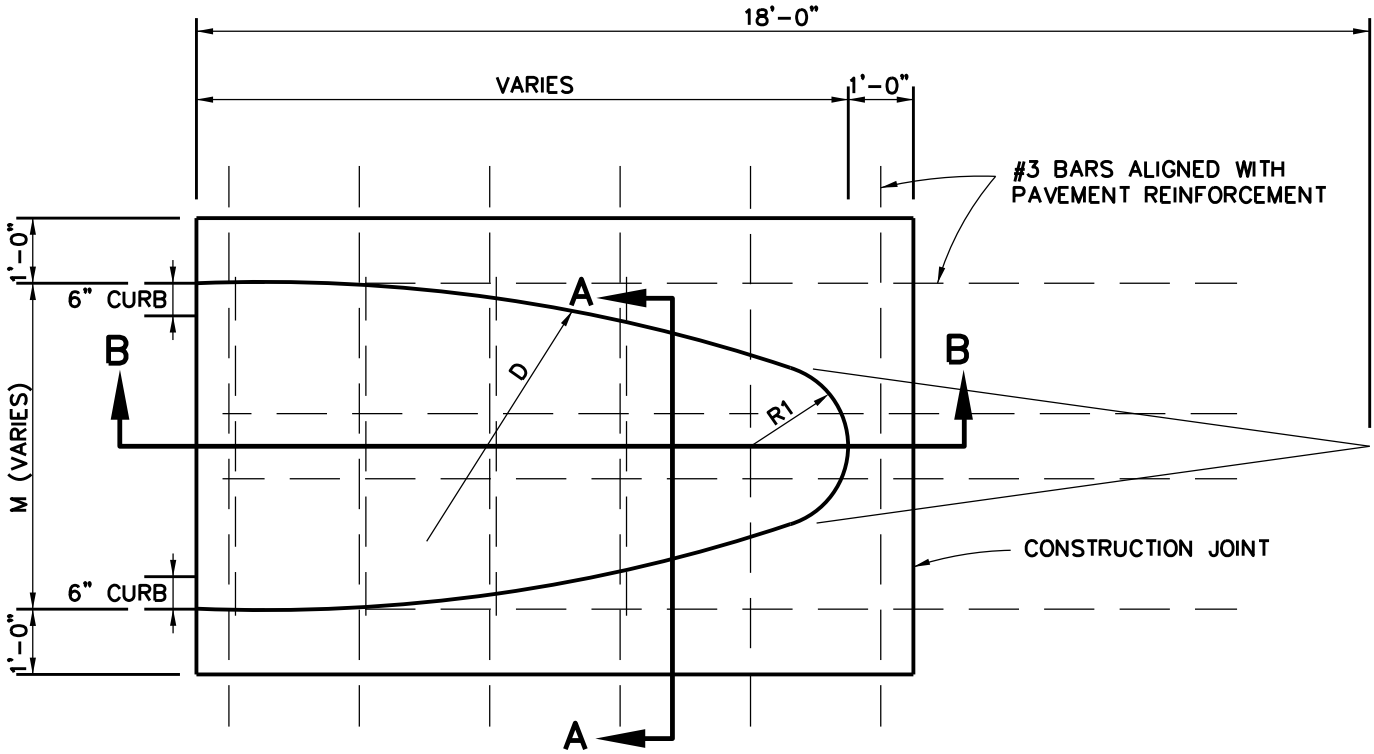

MONOLITHIC MEDIAN NOSE

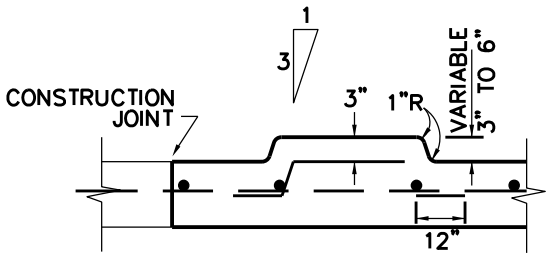

SECTION A-A

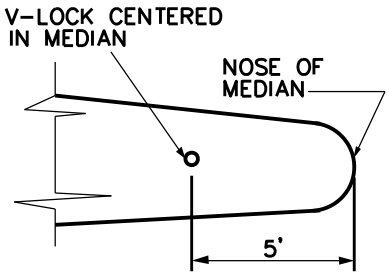

FOR DETAIL ON V-LOCK REVIEW PAGE 3 IN THE TRAFFIC SECTION

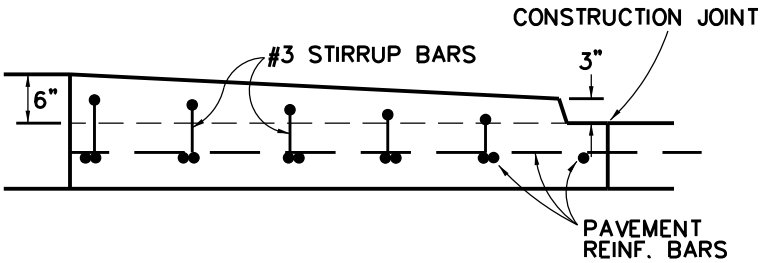

SECTION B-B

MEDIAN NOSE DIMENSIONS

M	R1=M/5	D
13	2.5	26.15
15	3	27.62
20	4	31.56
25	5	34.91
30	6	37.83
31	6.2	38.36
35	7	40.41

NOTE: FOR ALL MEDIANS 12' OR LESS THE RADIUS + 8' SHALL BE USED TO DETERMINE THE LENGTH OF MONOLITHIC NOSES

1/1

Revision Date: 11/10

Scale : N/A Date : 06/01/05	GARLAND ENGINEERING STANDARD DETAILS	PAVING DETAILS MONOLITHIC MEDIAN NOSE	PAGE 4
Design :			
Drawn : JMK			
Dwg. File : MED_003.DWG			
Project No. : STANDARD-DETAILS			

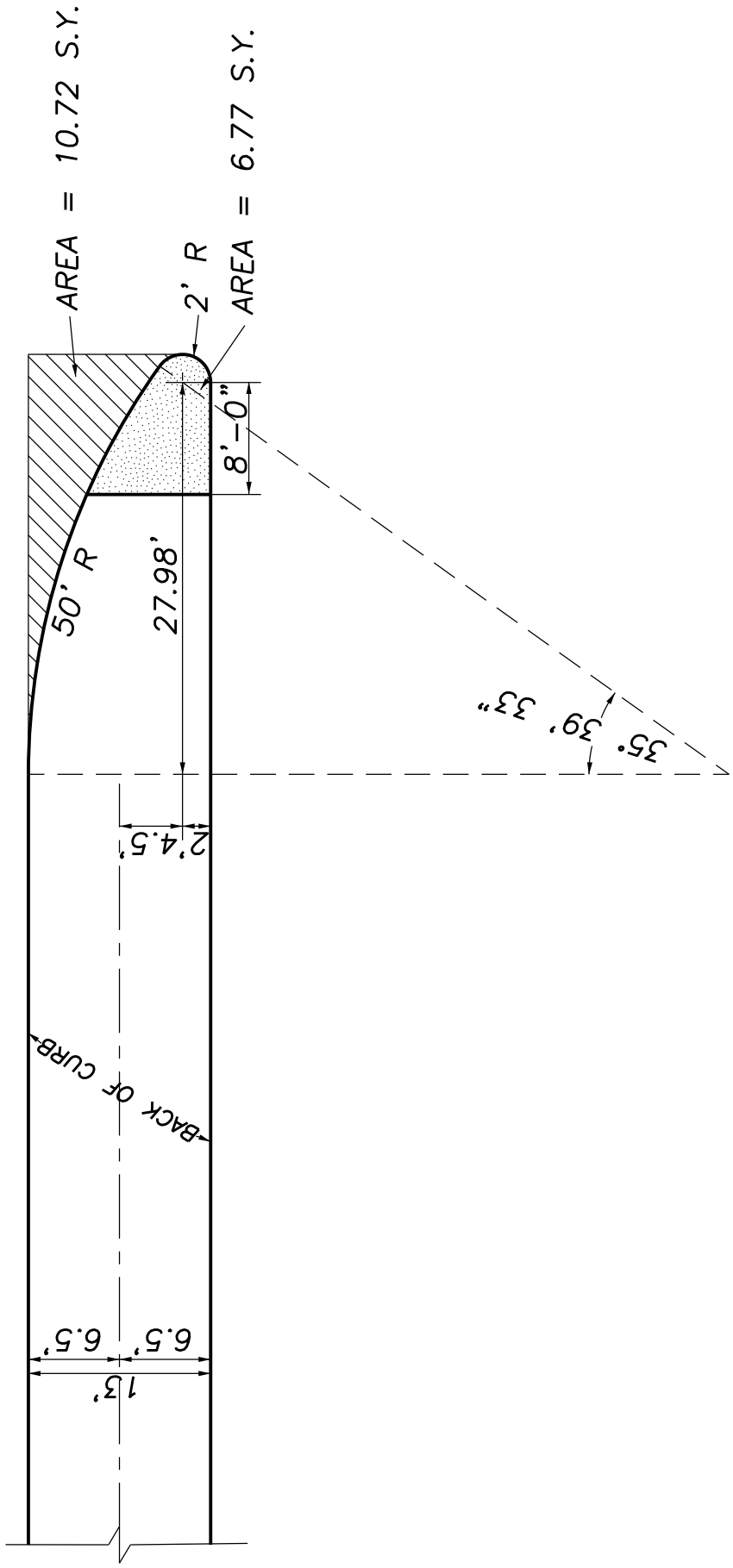

ECCENTRIC NOSE FOR 13' MEDIAN

1/3

Revision Date:			
Scale : N/A Date : 06/01/05	GARLAND ENGINEERING STANDARD DETAILS	13' MEDIAN (ECCENTRIC NOSE)	PAGE 5
Design :			
Drawn : JMK			
Dwg. File : MED_004.DWG			
Project No. : STANDARD-DETAILS			

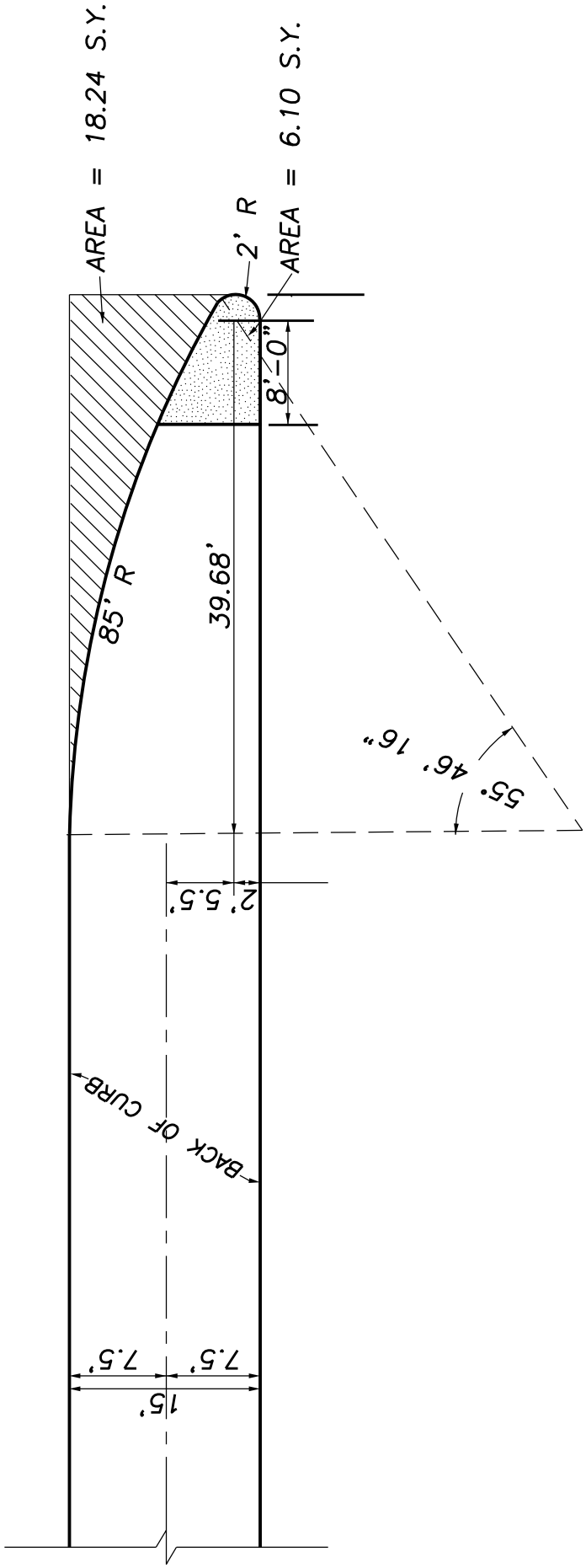

ECCENTRIC NOSE FOR 15' MEDIAN

2/3

Revision Date:

Scale : N/A Date : 06/01/05	GARLAND ENGINEERING STANDARD DETAILS	15' MEDIAN (ECCENTRIC NOSE)	PAGE 6
Design :			
Drawn : JMK			
Dwg. File : MED_004.DWG			
Project No. : STANDARD-DETAILS			

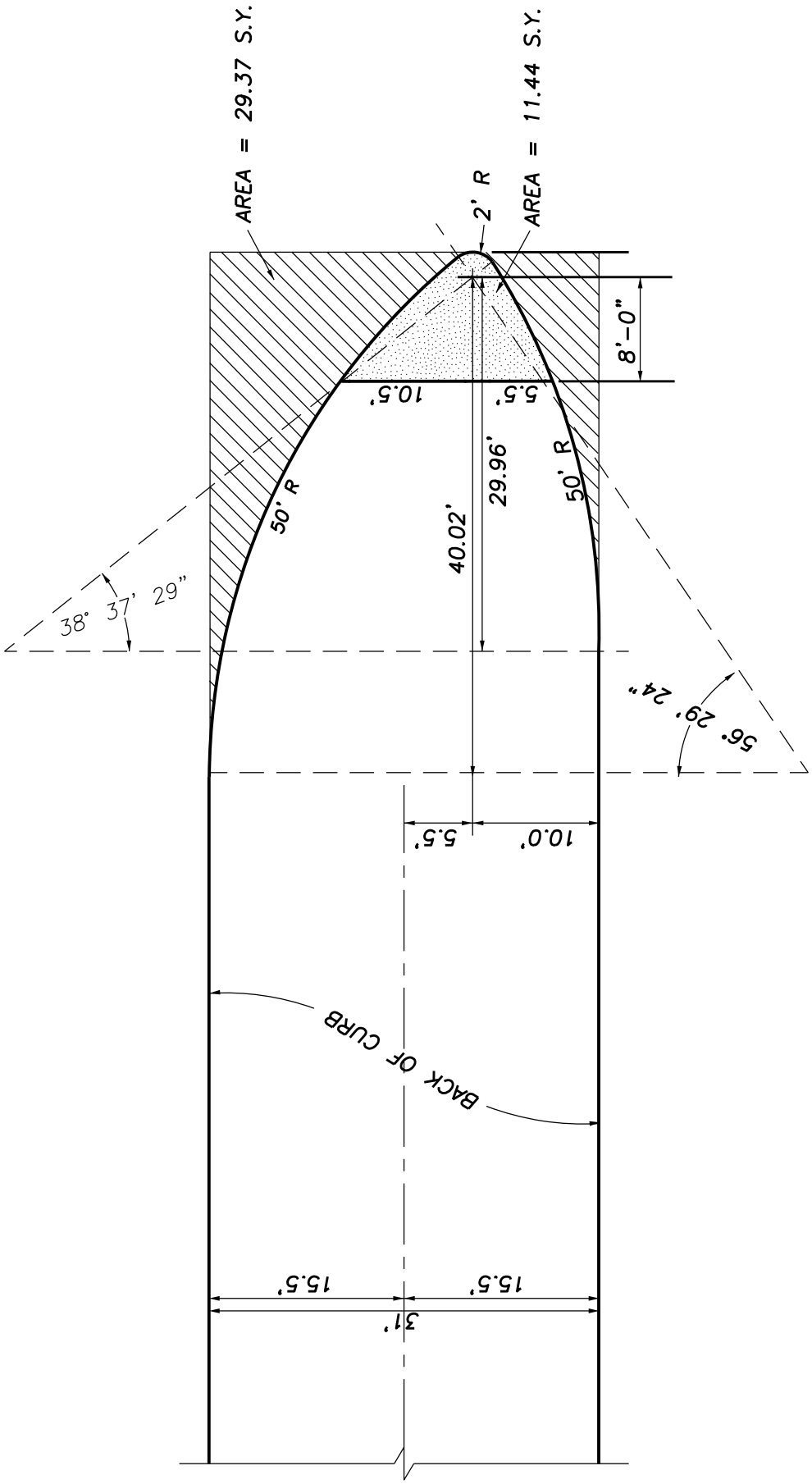

ECCENTRIC NOSE FOR 31' MEDIAN

3/3

Revision Date:

Scale : N/A Date : 06/01/05	GARLAND ENGINEERING STANDARD DETAILS	31' MEDIAN (ECCENTRIC NOSE)	PAGE 7
Design :			
Drawn : JMK			
Dwg. File : MED_004.DWG			
Project No. : STANDARD-DETAILS			

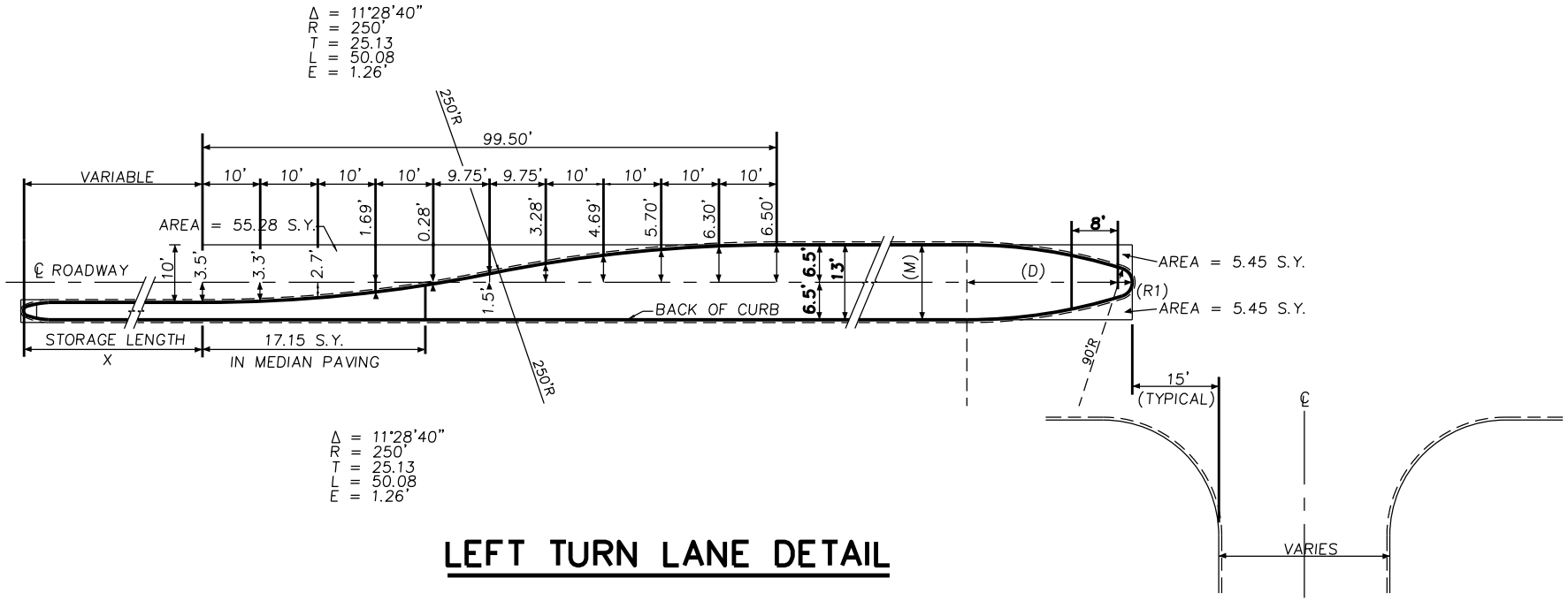

LEFT TURN LANE DETAIL

MEDIAN NOSE DIMENSIONS

M	R1=M/5	D
13	2.5	26.15
15	3	27.62
20	4	31.56
25	5	34.91
30	6	37.83
31	6.2	38.36
35	7	40.41

X IS THE LENGTH OF STORAGE SPACE
X' IS THE LENGTH OF BUTTONS INSTALLED
AND IS DETERMINED BY MULTIPLYING "X"
BY 0.8 OR 80%

1/2

Revision Date:

Scale : NA Date : 06/01/05
Design :
Drawn : JMK
Dwg. File : MED_005.DWG
Project No. : STANDARD DETAILS

GARLAND ENGINEERING

STANDARD DETAILS

LEFT TURN LANES
13' - 35' MEDIANS
(MONOLITHIC NOSE)

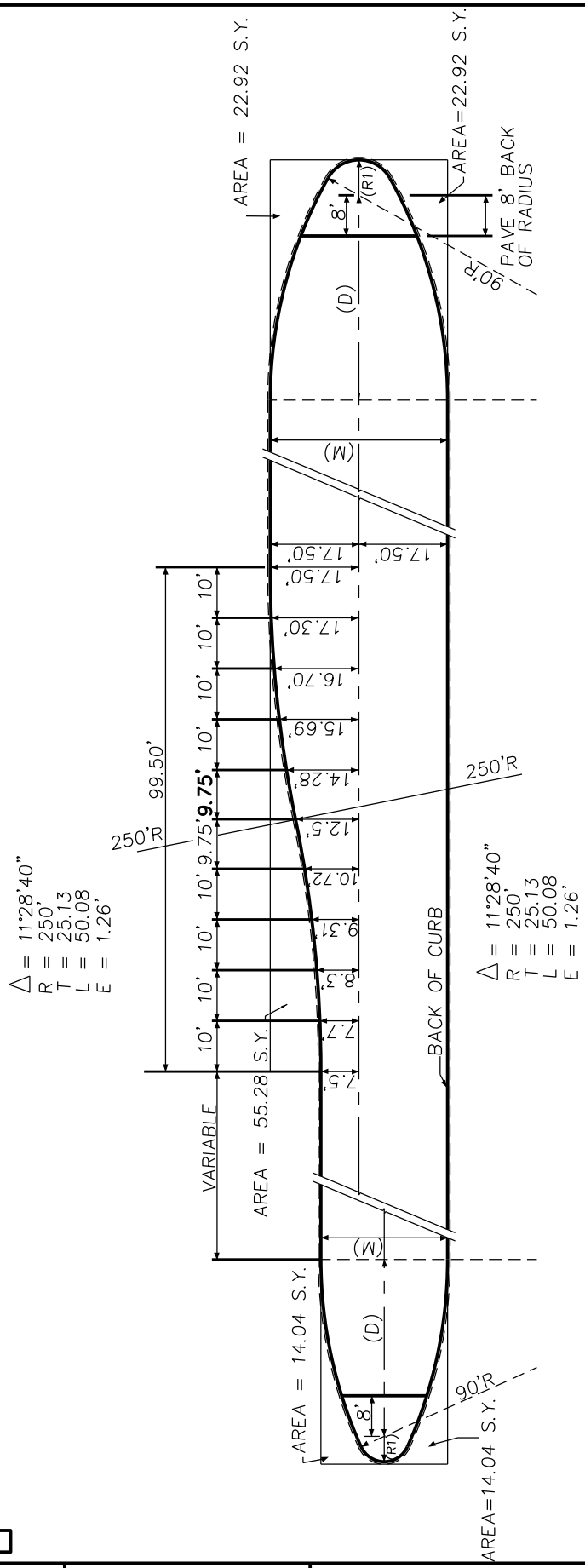

LEFT TURN LANE DETAIL

2/2

Revision Date:

Scale : N/A Date : 06/01/05	GARLAND ENGINEERING STANDARD DETAILS	LEFT TURN LANES 13' – 35 ' MEDIANS (MONOLITHIC NOSE)
Design :		
Drawn : JMK		
Dwg. File : MED_005.DWG		
Project No. : STANDARD DETAILS		

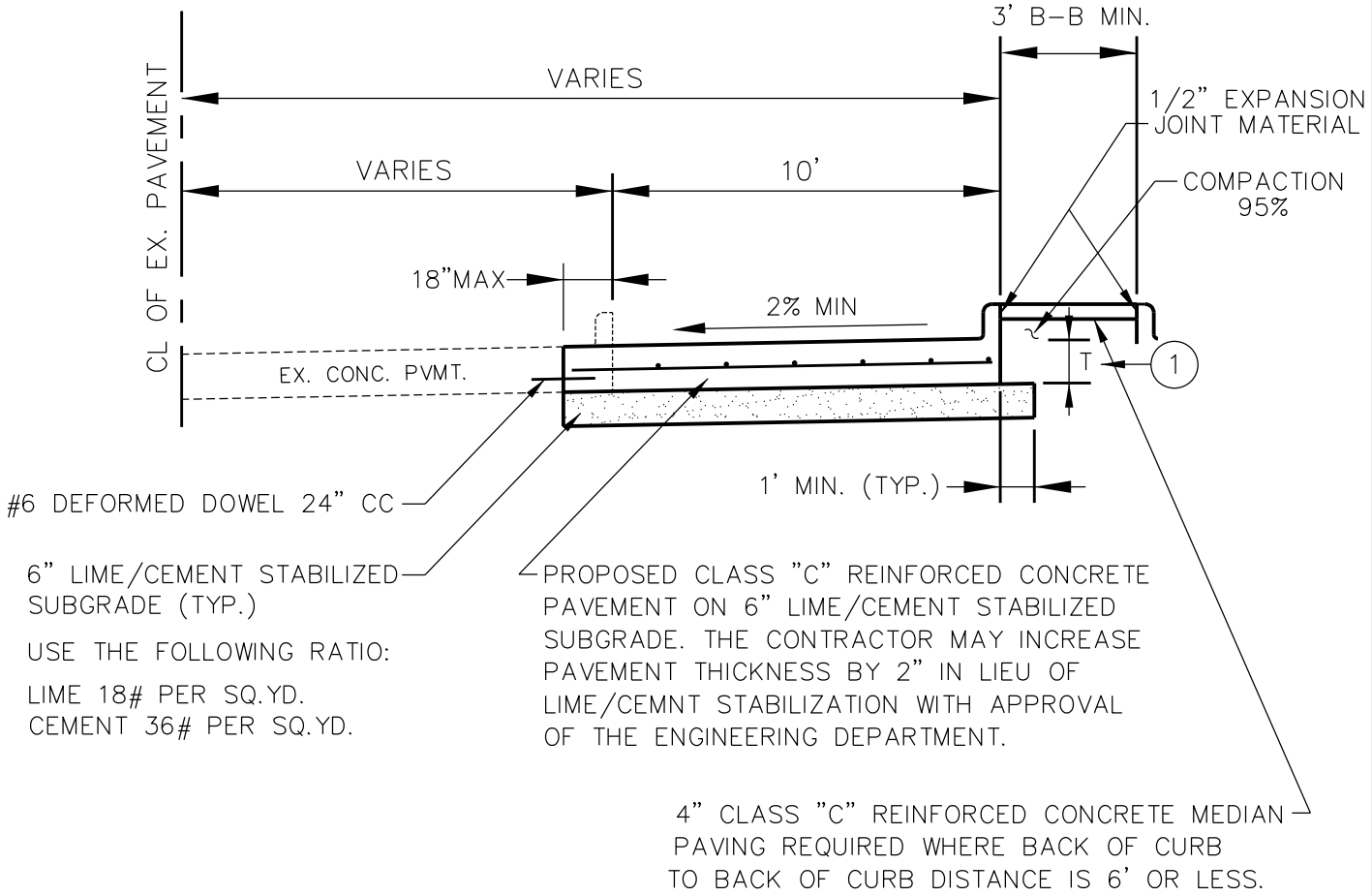

LEFT TURN LANE SECTION

NOTES:

1. "T"= 7" COLLECTOR OR 8" ARTERIAL.
ALL REINFORCEMENT SHALL BE #3 BARS ON 24" CENTERS BOTH WAYS, EXCEPT WHERE NOTED.

STABILIZATION OF DISTURBED AREAS PRIOR TO FINAL ACCEPTANCE:

PUBLIC RIGHT-OF-WAY, EASEMENTS, AND COMMON AREAS MUST BE STABILIZED WITH PERENNIAL VEGETATION COVER, FULLY ESTABLISHED WITH 100% COVERAGE, OR OTHER APPROVED STABILIZATION METHOD.

1/1

Revision Date: 06/08

Scale : NA Date : 11/13/06	GARLAND ENGINEERING STANDARD DETAILS	TYPICAL LEFT TURN LANE SECTION	PAGE 9a
Design :			
Drawn : JMK			
Dwg. File : MED_005.DWG			
Project No. : STANDARD DETAILS			

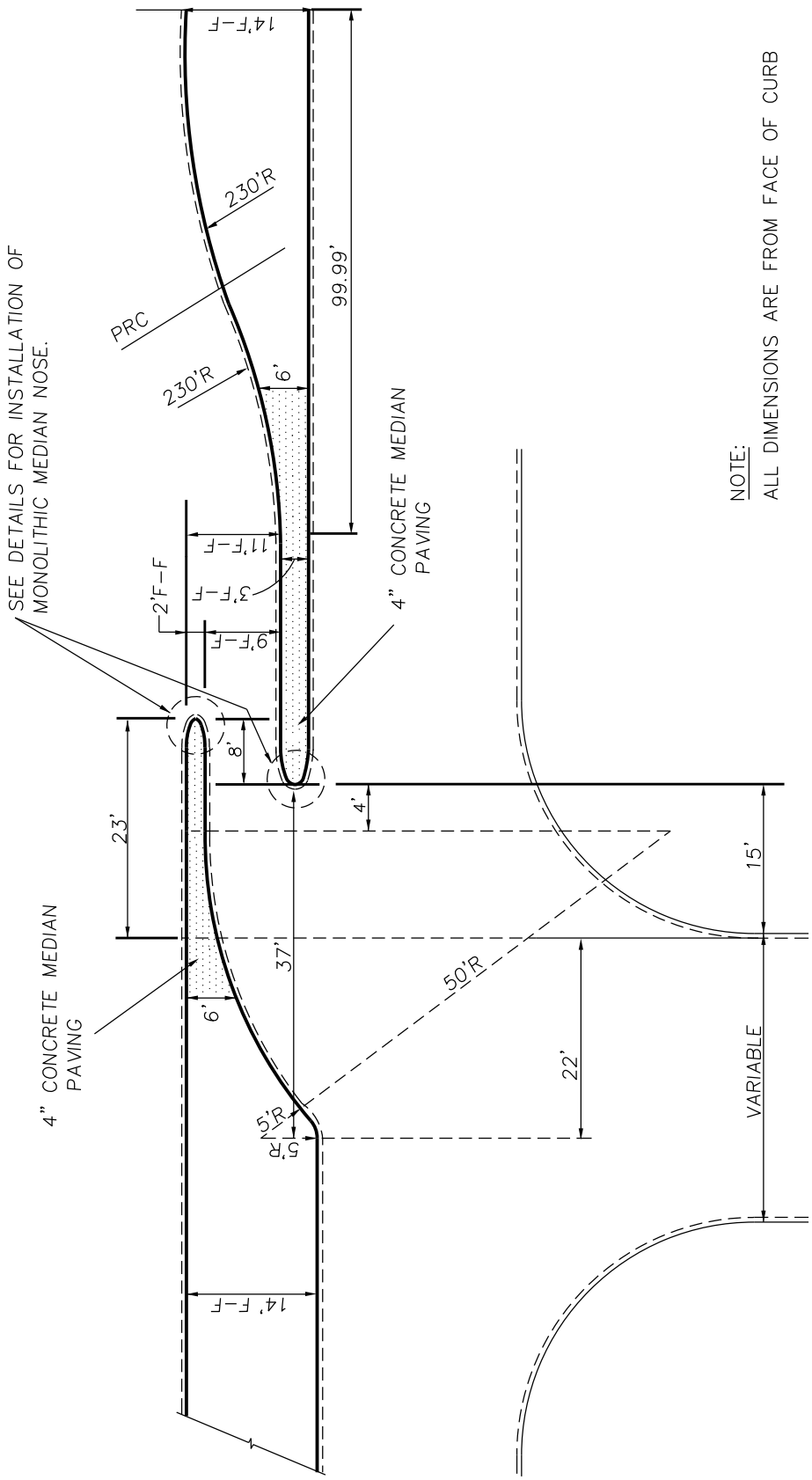

NOTE:
ALL DIMENSIONS ARE FROM FACE OF CURB

HOODED LEFT TURN BAY

1/1

Revision Date: 09/06

Scale : NA	Date : 06/01/05	GARLAND ENGINEERING STANDARD DETAILS	HOODED LEFT TURN BAY
Design :			
Drawn : JMK			
Dwg. File : MED_005.DWG			
Project No. : STANDARD DETAILS			

PAGE 10

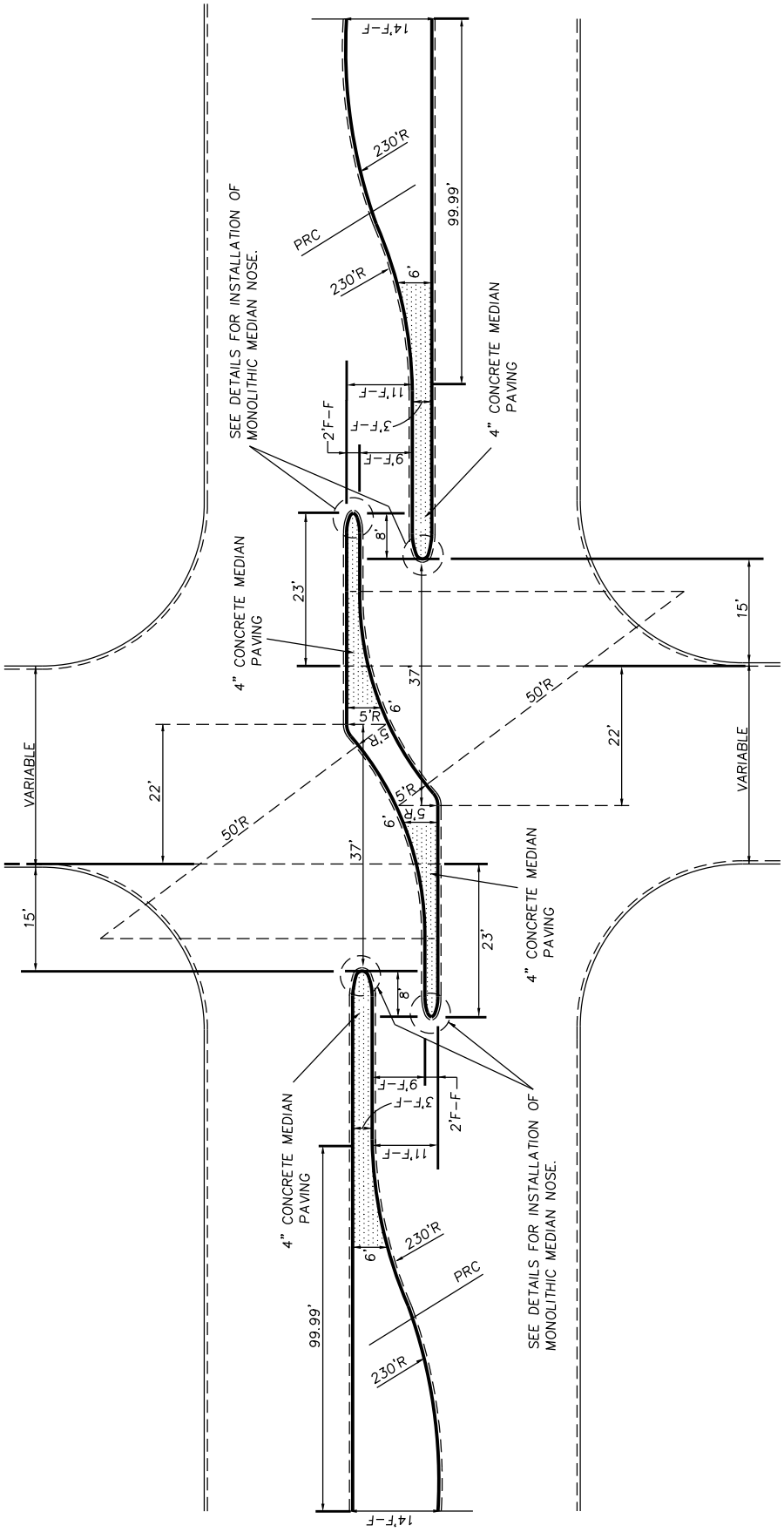

ONE WAY MEDIAN OPENING

1/1

Revision Date: 09/06

Scale : NA	Date : 06/01/05	GARLAND ENGINEERING STANDARD DETAILS	ONE WAY MEDIAN OPENINGS
Design :			
Drawn : JMK			
Dwg. File : MED_005.DWG			
Project No. : STANDARD DETAILS			