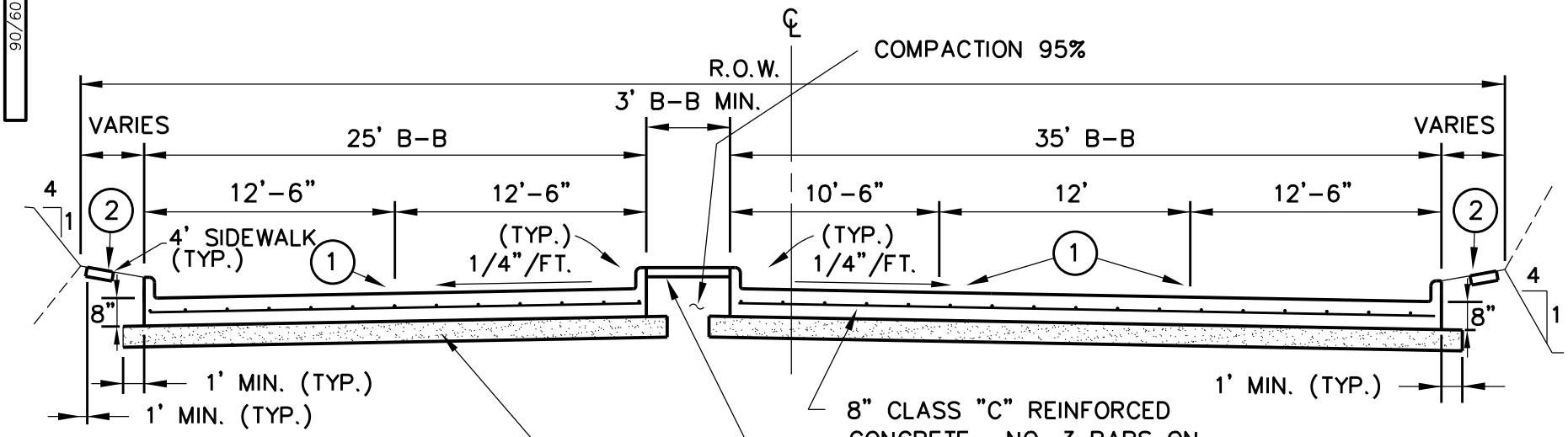

8" CLASS "C" REINFORCED CONCRETE. NO. 3 BARS ON 24" CENTERS BOTH WAYS (TYP.)

6" LIME/CEMENT STABILIZED SUBGRADE (TYP.)

USE THE FOLLOWING RATIO:

LIME 18# PER SQ.YD.
CEMENT 36# PER SQ.YD.

4" CLASS "C" REINFORCED CONCRETE MEDIAN PAVING REQUIRED WHERE BACK OF CURB TO BACK OF CURB DISTANCE IS 6' OR LESS.

LEFT TURN SECTION

NOTES:

1. MIN. PAVEMENT DEPTH AND STRENGTH SHALL BE 8" - CLASS "C".

① SAWED & SEALED LONGITUDINAL CONTRACTION JOINT OR CONSTRUCTION JOINT.

② SLOPE OF PARKWAY IS 2% MIN. CROSS SLOPE OF SIDEWALK IS 1% MAX.

STABILIZATION OF DISTURBED AREAS PRIOR TO FINAL ACCEPTANCE:

PUBLIC RIGHT-OF-WAY, EASEMENTS, AND COMMON AREAS MUST BE STABILIZED WITH PERENNIAL VEGETATION COVER, FULLY ESTABLISHED WITH 100% COVERAGE, OR OTHER APPROVED STABILIZATION METHOD.

Revision Date: 09/06

Scale : N/A Date : 06/01/05
Design :
Drawn : GAV
Dwg. File : PAV_001.DWG
Project No. : STANDARD-DETAILS

GARLAND ENGINEERING
STANDARD DETAILS

FOUR-LANE DIVIDED STREET

CURVE 1 (SEE LEFT TURN LANE DETAIL)

$\Delta = 11^\circ 28' 40''$
R = 250.00'
T = 25.13'
L = 50.08'

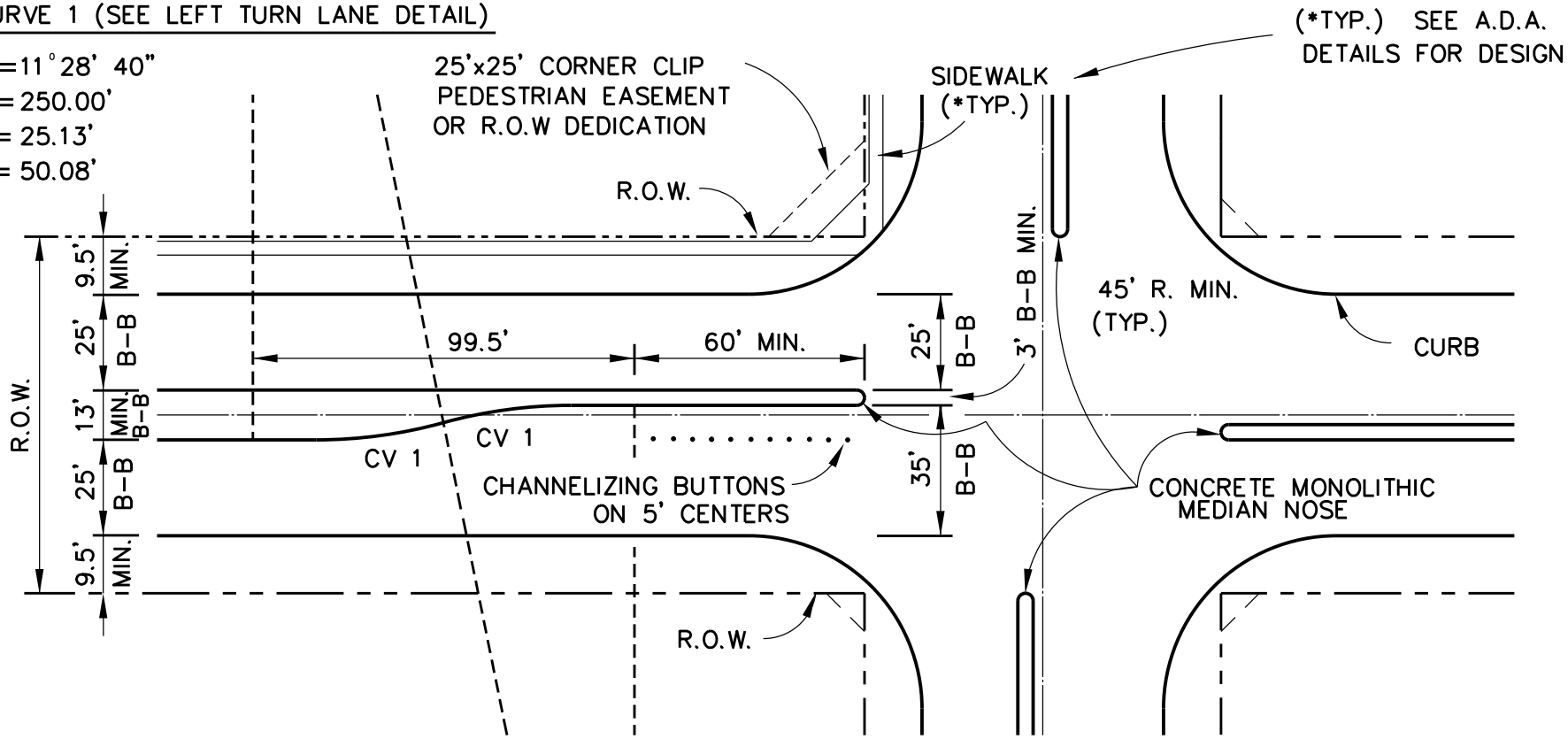

PLAN

NOTES:

1. MIN. PAVEMENT DEPTH AND STRENGTH SHALL BE 8" - CLASS "C".

STABILIZATION OF DISTURBED AREAS PRIOR TO FINAL ACCEPTANCE:

PUBLIC RIGHT-OF-WAY, EASEMENTS, AND COMMON AREAS MUST BE STABILIZED WITH PERENNIAL VEGETATION COVER, FULLY ESTABLISHED WITH 100% COVERAGE, OR OTHER APPROVED STABILIZATION METHOD.

Revision Date:

Scale : N/A Date : 06/01/05
Design :
Drawn : GAV
Dwg. File : PAV_001.DWG
Project No. : STANDARD-DETAILS

GARLAND ENGINEERING
STANDARD DETAILS

FOUR-LANE DIVIDED STREET

2/3

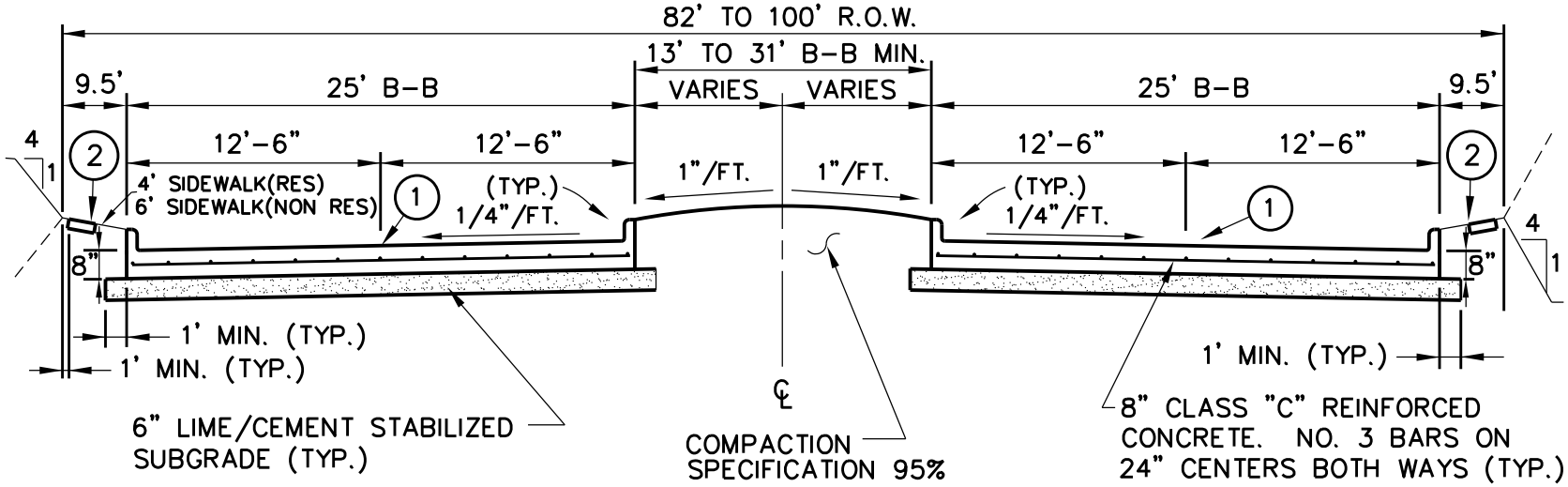

USE THE FOLLOWING RATIO:

LIME 18# PER SQ.YD.
CEMENT 36# PER SQ.YD.

REGULAR SECTION

NOTES:

1. MIN. PAVEMENT DEPTH AND STRENGTH SHALL BE 8" – CLASS "C".

① SAWED & SEALED LONGITUDINAL CONTRACTION JOINT OR CONSTRUCTION JOINT.

② SLOPE OF PARKWAY IS 2% MIN. CROSS SLOPE OF SIDEWALK IS 1% MAX.

STABILIZATION OF DISTURBED AREAS PRIOR TO FINAL ACCEPTANCE:

PUBLIC RIGHT-OF-WAY, EASEMENTS, AND COMMON AREAS MUST BE STABILIZED WITH PERENNIAL VEGETATION COVER, FULLY ESTABLISHED WITH 100% COVERAGE, OR OTHER APPROVED STABILIZATION METHOD.

Revision Date: 09/06

Scale : N/A Date : 06/01/05
Design :
Drawn : GAV
Dwg. File : PAV_001.DWG
Project No. : STANDARD-DETAILS

GARLAND ENGINEERING
STANDARD DETAILS

FOUR-LANE DIVIDED STREET

3/3

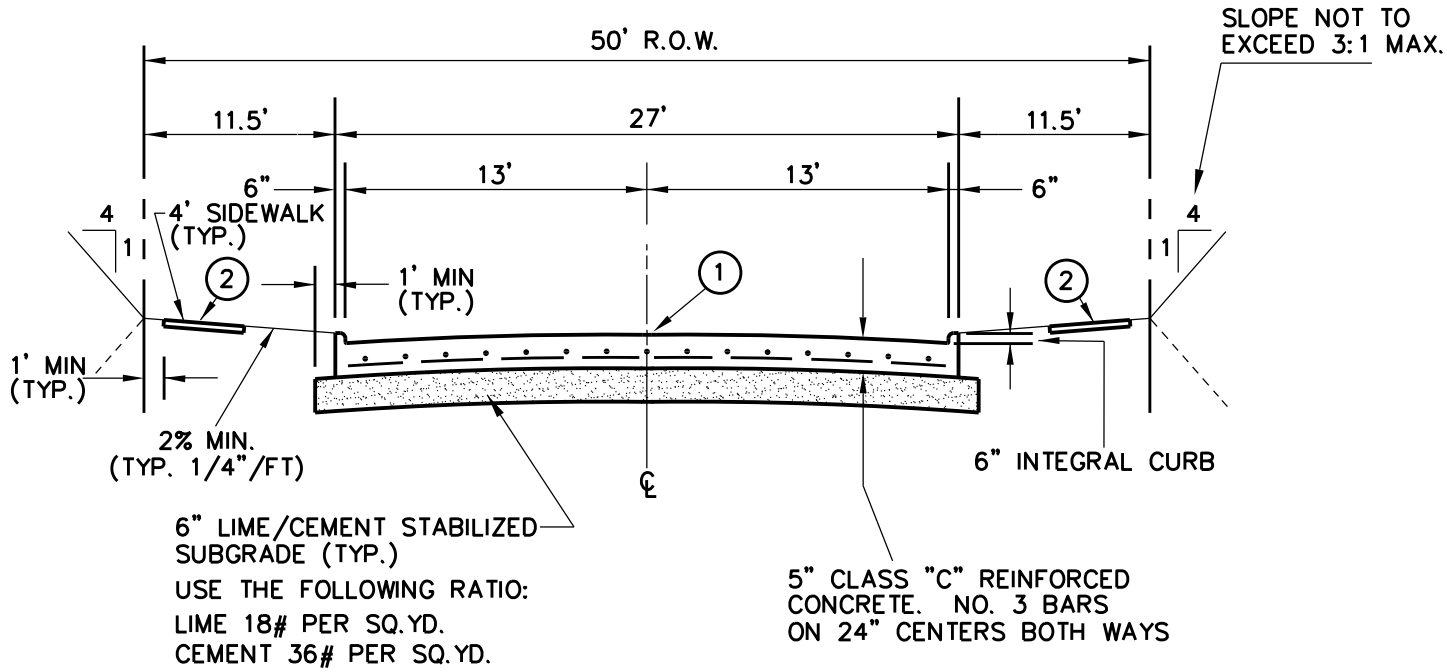

① INDICATES SAWED & SEALED LONGITUDAL CONTRACTION OR CONSTRUCTION JOINT.

② SIDEWALK CROSS SLOPE 1% MAX.

TYPE (*)	STREET WIDTH	R.O.W. WIDTH	PARABOLIC CROWN HEIGHT
G	27' B-B	50'	5"

(*) PER C.O.G. MAJOR THOURGHFARE PLAN

NOTES:

1. ALL REINFORCEMENT SHALL BE #3 BARS ON 24" CENTERS BOTH WAYS, EXCEPT WHERE NOTED.
2. PAVEMENT SHALL BE CLASS "C" CONCRETE.

STABILIZATION OF DISTURBED AREAS PRIOR TO FINAL ACCEPTANCE:

PUBLIC RIGHT-OF-WAY, EASEMENT, AND COMMON AREAS MUST BE STABILIZED WITH PERENNIAL VEGETATION COVER, FULLY ESTABLISHED WITH 100% COVERAGE, OR OTHER APPROVED STABILIZATION METHOD.

1/1

Revision Date: 09/06

Scale : N/A Date : 06/01/05	GARLAND ENGINEERING STANDARD DETAILS	TYPICAL RESIDENTIAL PAVING SECTION	PAGE 4
Design :			
Drawn : GAV			
Dwg. File : PAV_002.DWG			
Project No. : STANDARD-DETAILS			

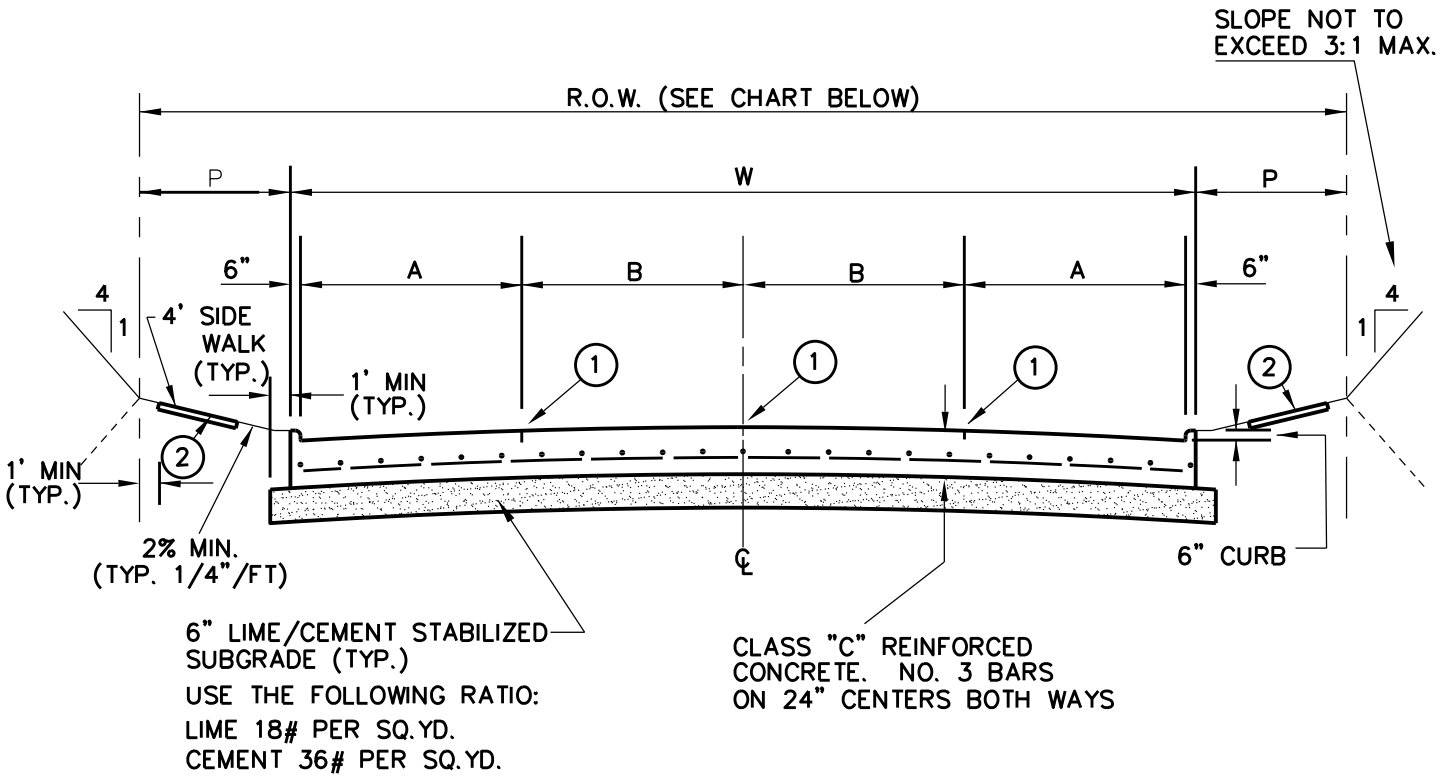

① INDICATES SAWED & SEALED LONGITUDAL CONTRACTION OR CONSTRUCTION JOINT.

② SIDEWALK CROSS SLOPE 1% MAX.

TYPE (*)	STREET WIDTH (W)	A	B	R.O.W. WIDTH	P	PARABOLIC CROWN HEIGHT	MIN. PAVING THICKNESS
G	27' B-B	0'	13'	50'	11.5'	5"	5"
F	37' B-B (RES)	8'	10'	60'	11.5'	6"	6"
F	37' B-B (COM)	8'	10'	60'	11.5'	7"	7"
E	45' B-B	11'	11'	80'	17.5'	8"	7"
D2	61' B-B	10'	10'	80'	9.5'	8"	7"
D1	62' B-B	10.5'	10'	82'	10'	8"	8"

(*) PER C.O.G. MAJOR THOURGHFARE PLAN

NOTES:

1. ALL REINFORCEMENT SHALL BE #3 BARS ON 24" CENTERS BOTH WAYS, EXCEPT WHERE NOTED.
2. PAVEMENT SHALL BE CLASS "C" CONCRETE.

STABILIZATION OF DISTURBED AREAS PRIOR TO FINAL ACCEPTANCE:

PUBLIC RIGHT-OF-WAY, EASEMENT, AND COMMON AREAS MUST BE STABILIZED WITH PERENNIAL VEGETATION COVER, FULLY ESTABLISHED WITH 100% COVERAGE, OR OTHER APPROVED STABILIZATION METHOD.

1/1

Revision Date: 09/06

Scale : N/A Date : 06/01/05	GARLAND ENGINEERING STANDARD DETAILS	TYPICAL PAVING SECTION
Design :		
Drawn : GAV		
Dwg. File : PAV_003.DWG		
Project No. : STANDARD-DETAILS		

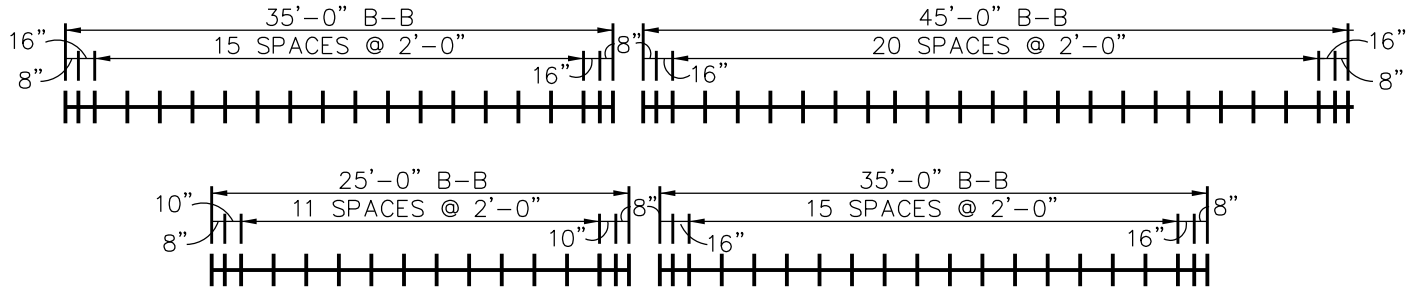

MAJOR STREETS

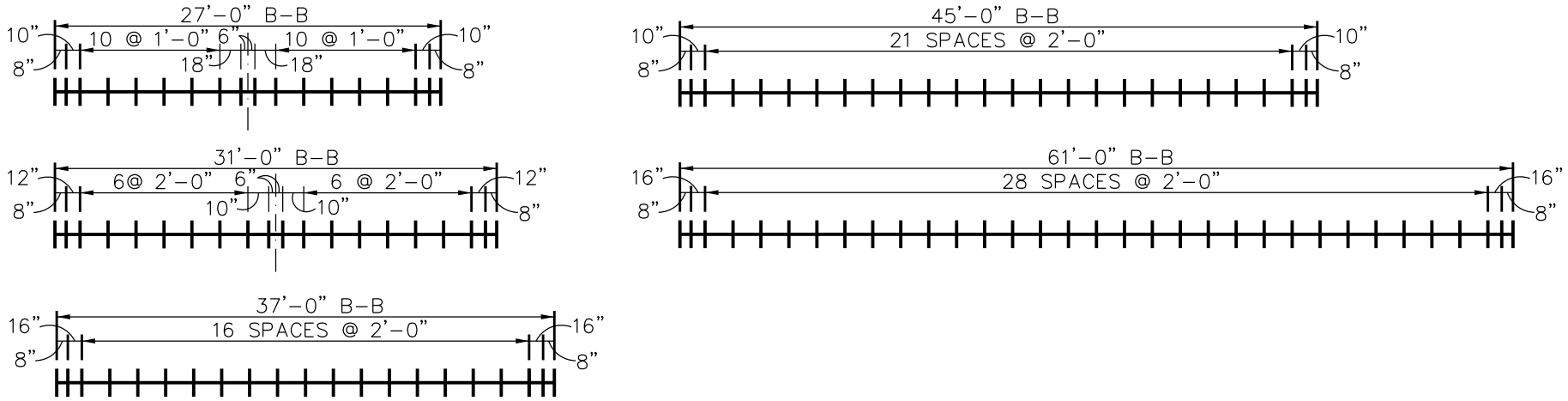

LOCAL & COLLECTOR STREETS

SPACING DIAGRAM FOR DOWELS AT EXPANSION JOINTS

NOTE:

1. SEE HEADER AND JOINT DETAILS FOR DOWEL TYPE AND SIZE.

1
1

Revision Date:

Scale : N/A Date : 06/01/05
Design :
Drawn : JMK
Dwg. File : PAV_004.DWG
Project No. : STANDARD-DETAILS

GARLAND ENGINEERING
STANDARD DETAILS

PAVING DETAILS
SPACING DIAGRAM FOR
DOWELS AT EXPANSION JOINTS

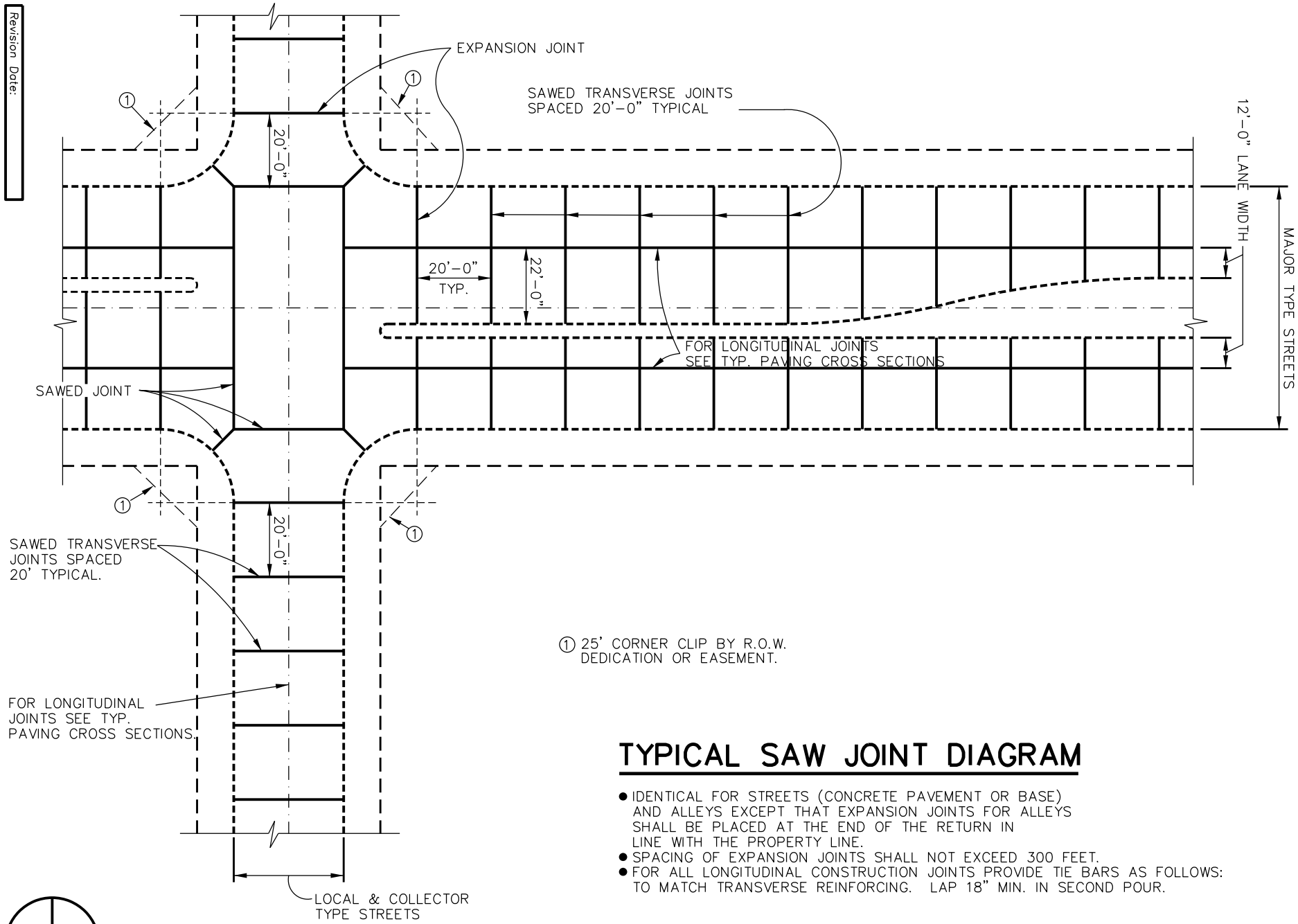

TYPICAL SAW JOINT DIAGRAM

- IDENTICAL FOR STREETS (CONCRETE PAVEMENT OR BASE) AND ALLEYS EXCEPT THAT EXPANSION JOINTS FOR ALLEYS SHALL BE PLACED AT THE END OF THE RETURN IN LINE WITH THE PROPERTY LINE.
- SPACING OF EXPANSION JOINTS SHALL NOT EXCEED 300 FEET.
- FOR ALL LONGITUDINAL CONSTRUCTION JOINTS PROVIDE TIE BARS AS FOLLOWS: TO MATCH TRANSVERSE REINFORCING. LAP 18" MIN. IN SECOND POUR.

Revision Date:

Scale : N/A Date : 06/01/05
Design :
Drawn : JMK
Dwg. File : PAV_005.DWG
Project No. : STANDARD-DETAILS

GARLAND ENGINEERING

STANDARD DETAILS

PAVING DETAILS
SPACING DIAGRAM FOR JOINTS

1/1

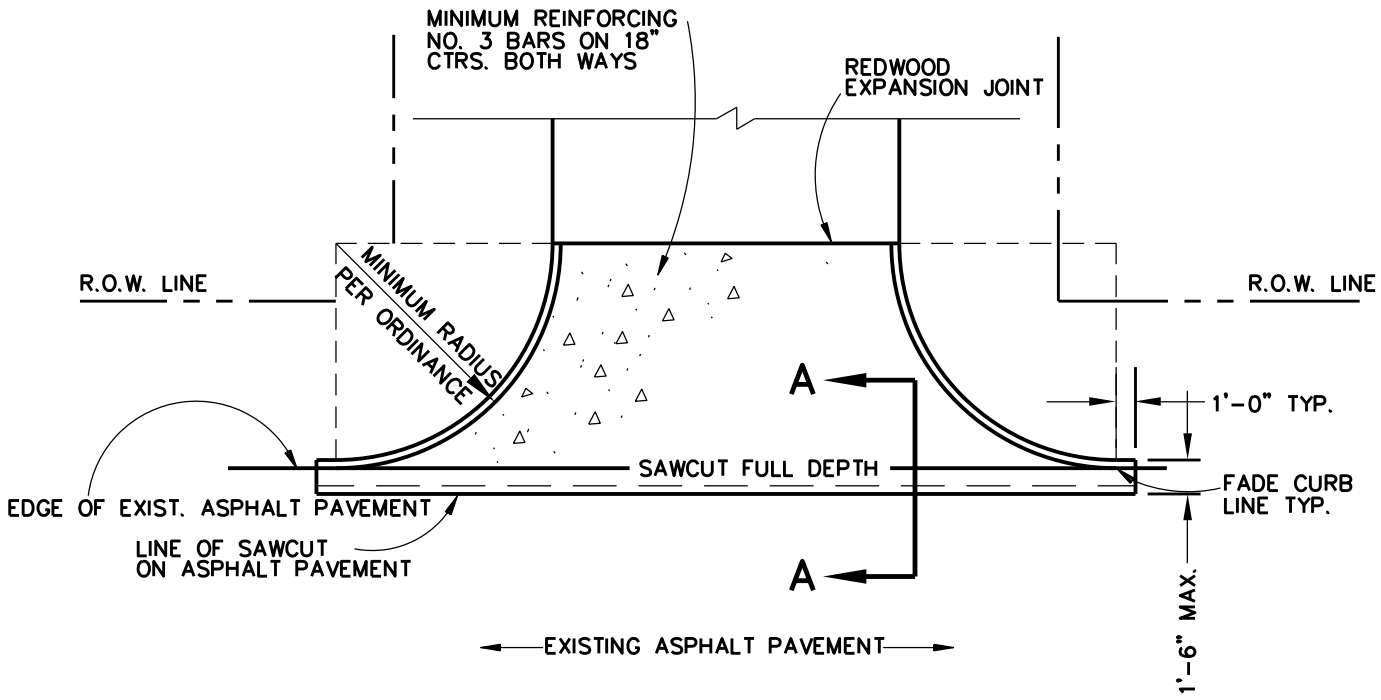

CONCRETE TO ASPHALT ROADWAY TEE INTERSECTION OR DRIVEWAY APPROACH

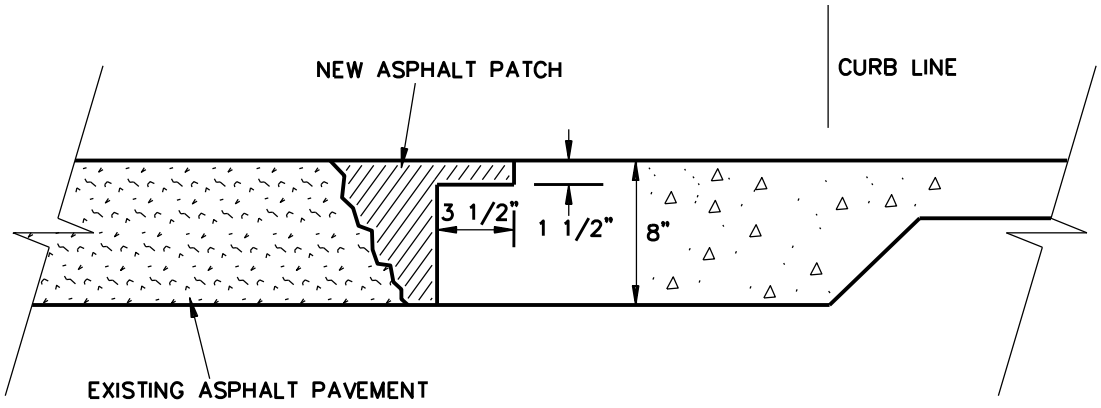

SECTION A–A

1
1

Revision Date:

Scale : N/A Date : 06/01/05	GARLAND ENGINEERING STANDARD DETAILS	CONCRETE TO ASPHALT ROADWAY TEE INTERSECTION	PAGE 8
Design :			
Drawn : JMK			
Dwg. File : PAV_006.DWG			
Project No. : STANDARD–DETAILS			

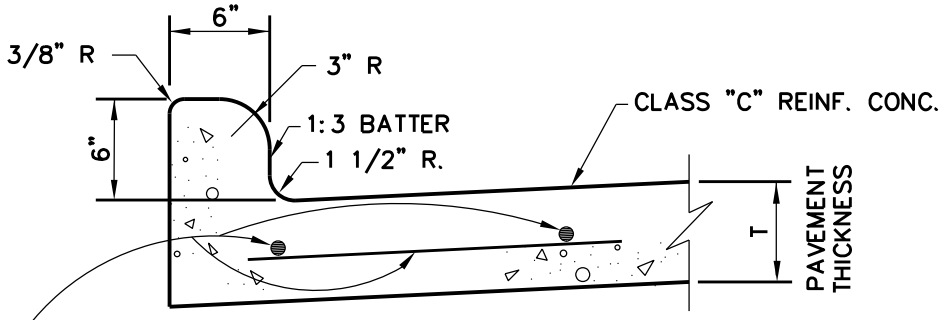

INTEGRAL CURB & GUTTER

NO SCALE

NO. 3 BARS ON 24" O.C.E.W.

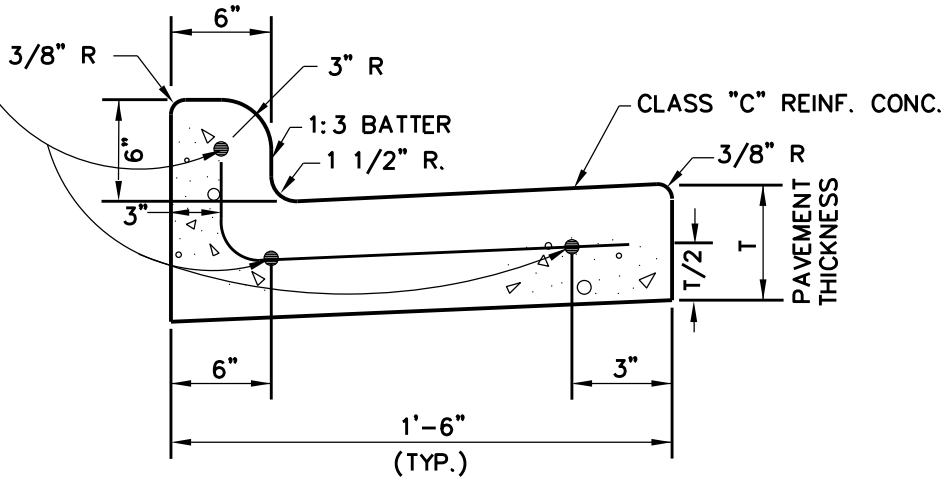

SEPARATE CURB & GUTTER

NO SCALE

NOTE: GUTTER LINE MUST BE 18" FROM BACK OF CURB

NO. 3 BARS ON 24" O.C.E.W.

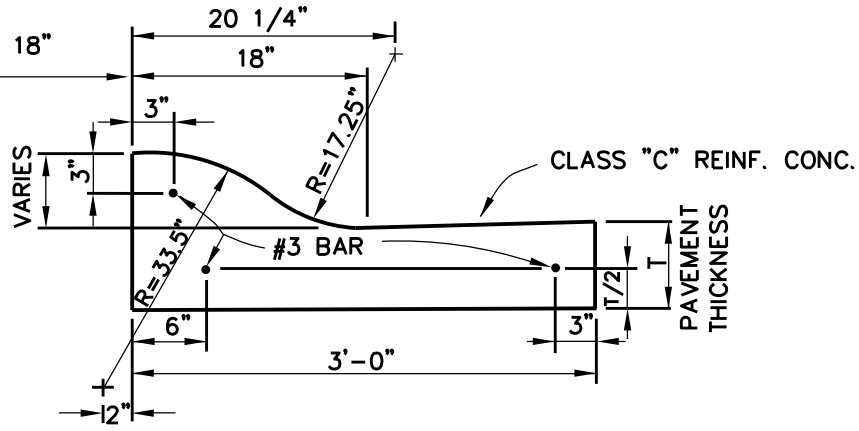

MOUNTABLE MONOLITHIC CURB

NO SCALE

1/1

Revision Date:

Scale : N/A Date : 06/01/05	GARLAND ENGINEERING STANDARD DETAILS	INTEGRAL, SEPARATE, MOUNTABLE MONOLITHIC CONCRETE CURB & GUTTER
Design :		
Drawn : GAV		
Dwg. File : PAV_007.DWG		
Project No. : STANDARD-DETAILS		

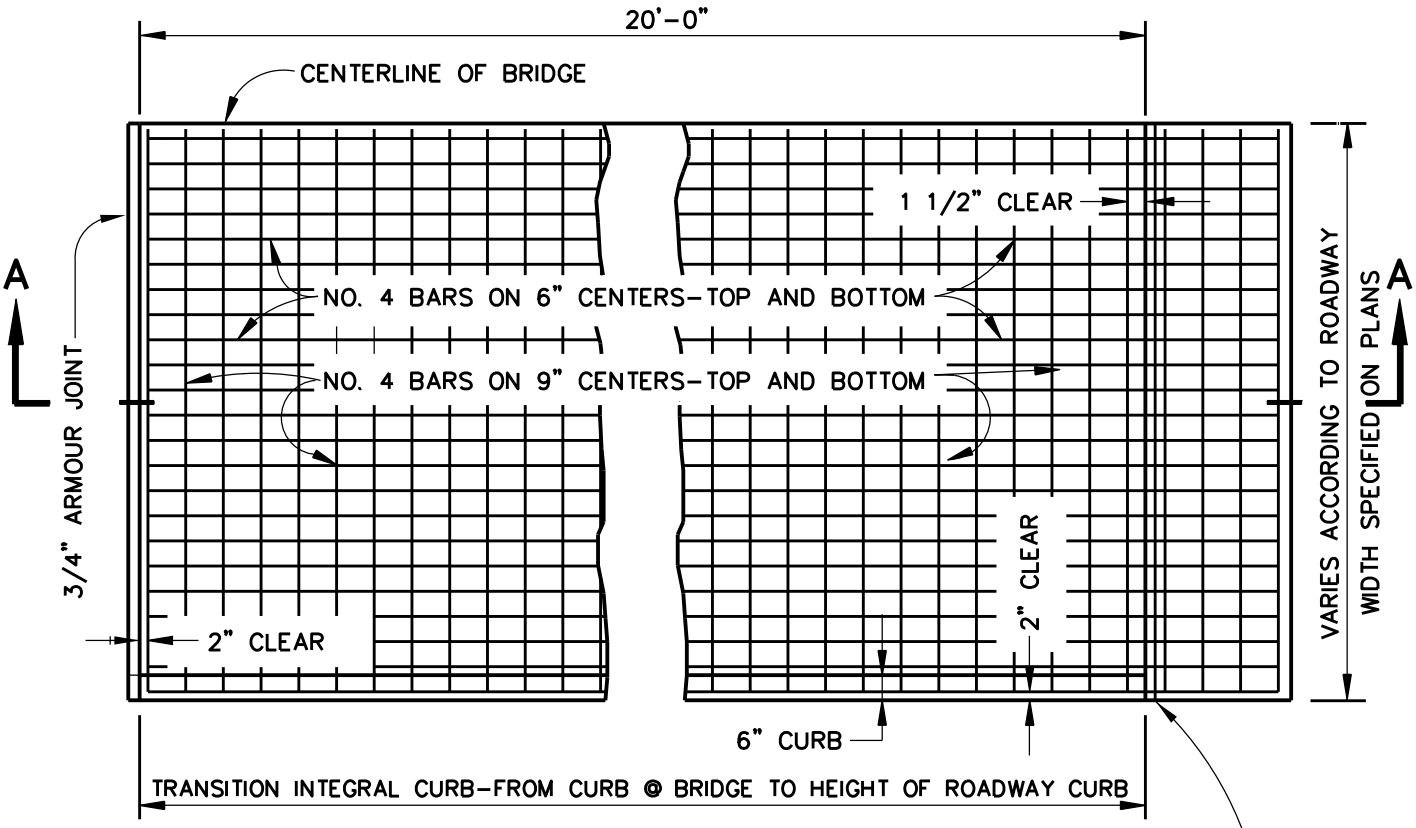

PLAN

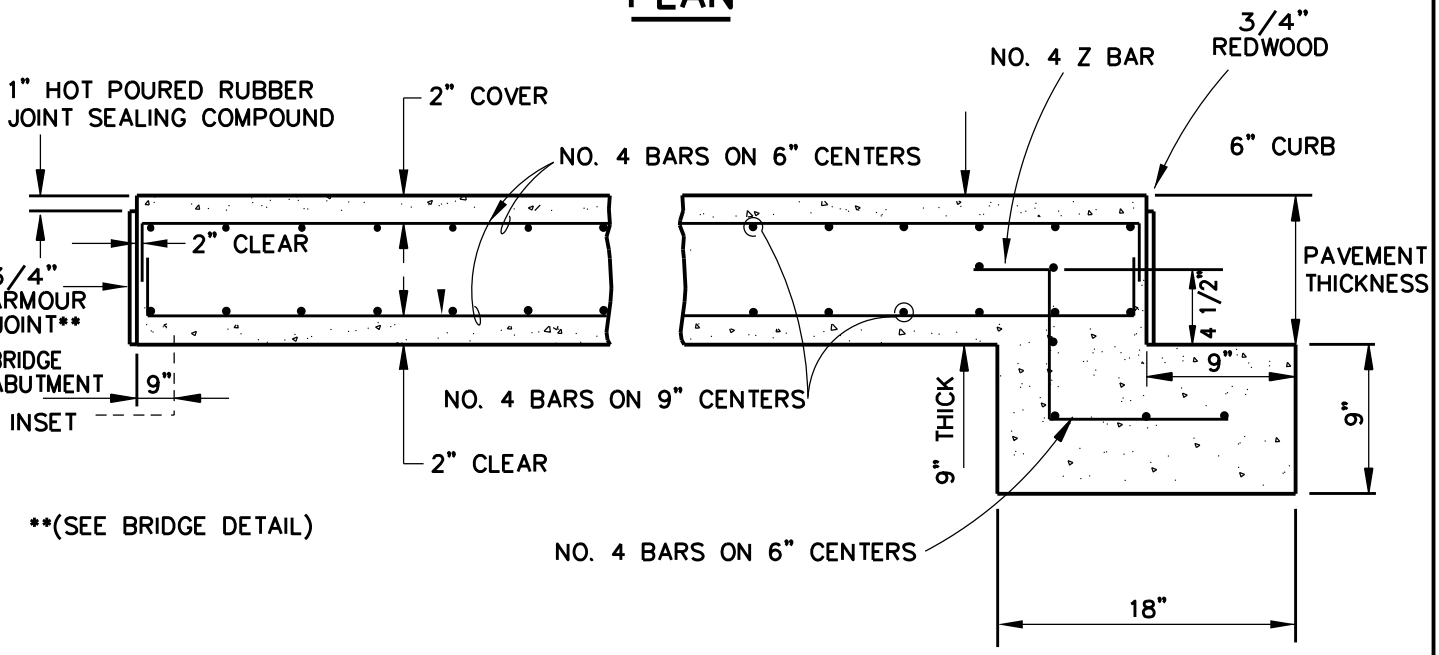

**(SEE BRIDGE DETAIL)

SECTION A-A

1/1

Revision Date:

Scale : N/A Date : 06/01/05	GARLAND ENGINEERING STANDARD DETAILS	PAVING DETAILS BRIDGE APPROACH SLAB
Design :		
Drawn : DCN		
Dwg. File : PAV_008.DWG		
Project No. : STANDARD-DETAILS		

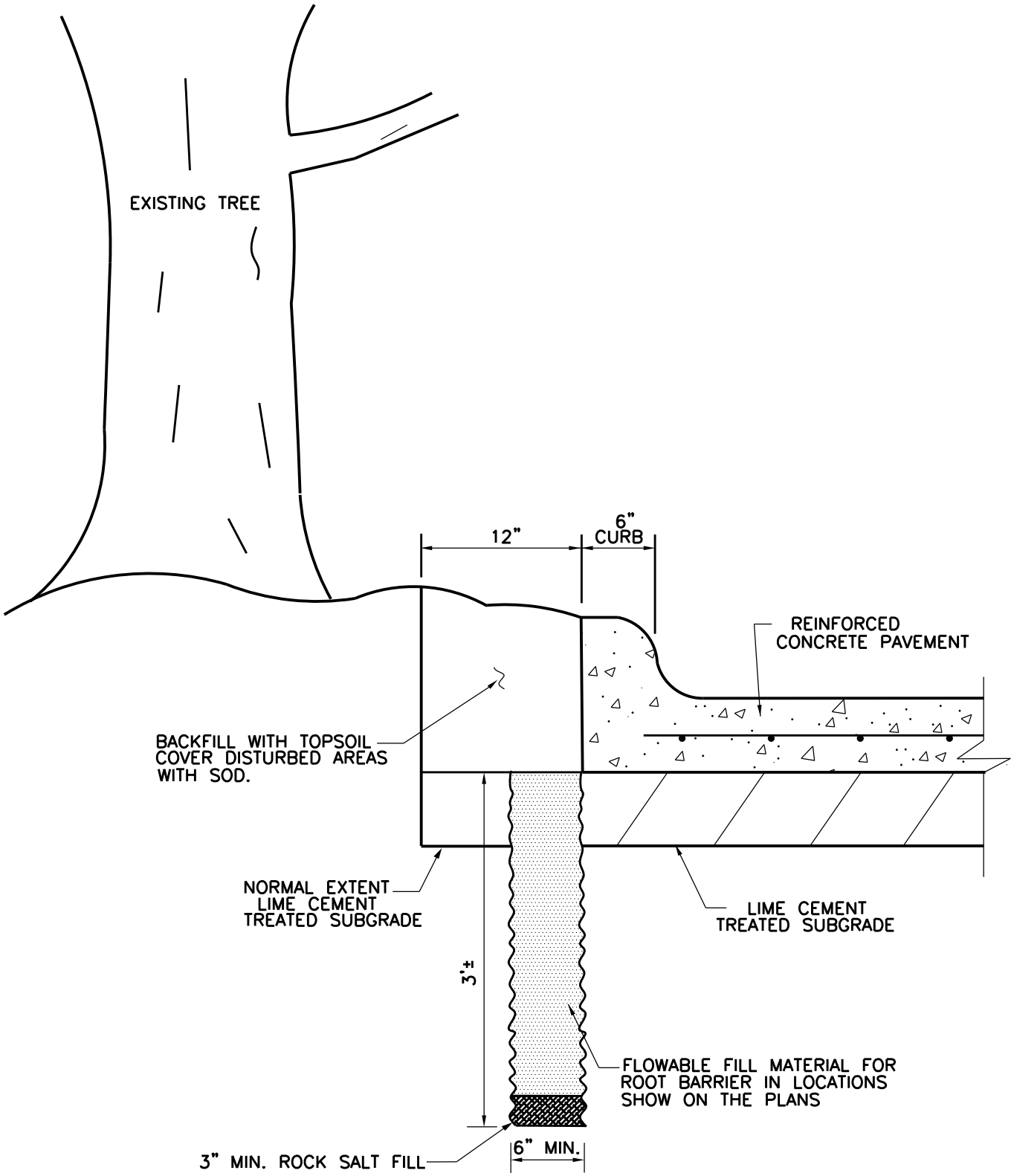

NOTE:

1. CONTRACTOR SHALL SUBMIT FLOWABLE FILL MIX DESIGN TO FIELD ENGINEERING FOR APPROVAL PRIOR TO CONSTRUCTION.

1/1

Revision Date:

Scale : N/A Date : 06/01/05	GARLAND ENGINEERING	ROOT BARRIER DETAILS
Design :		
Drawn : SEL		
Dwg. File : PAV_009.DWG		
Project No. : STANDARD-DETAILS	STANDARD DETAILS	

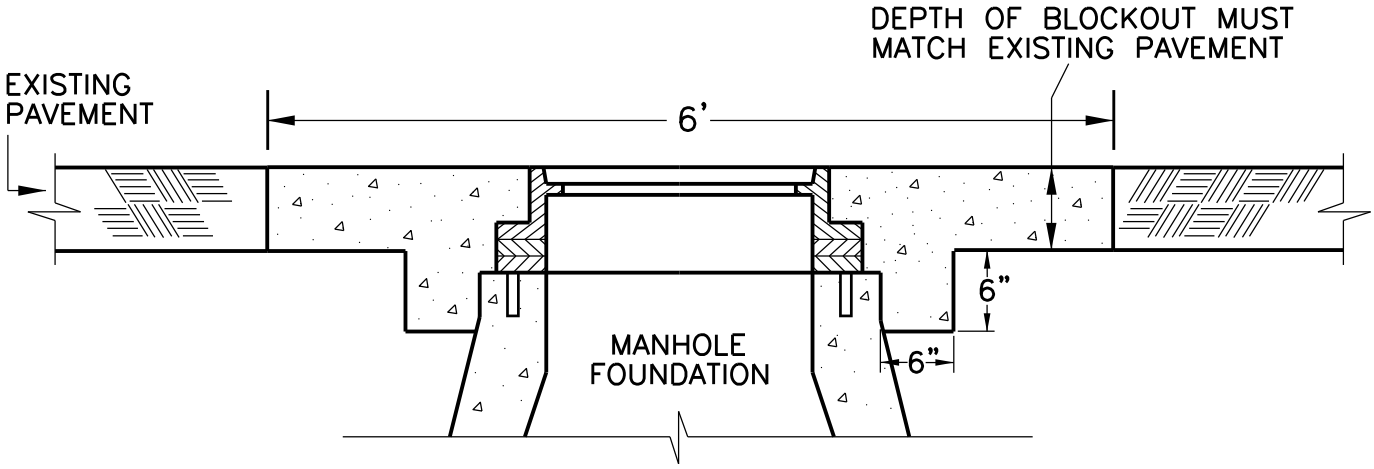

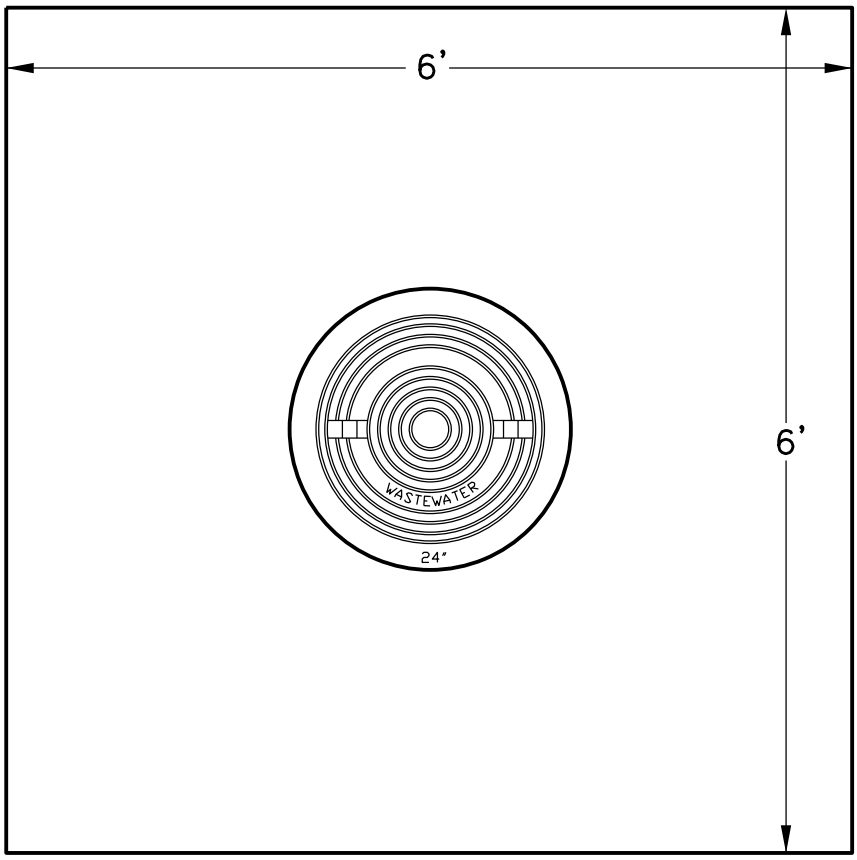

NOTE:

1. BLOCKOUTS MUST HAVE #3 L-BAR "BEND OUT" DOWELS AROUND THE BLOCKOUT AREA.
2. CONCRETE POURED IN THE BLOCKOUT MUST CONTACT THE MAIN MANHOLE FOUNDATION 6" DEEP AND 6" WIDE.
3. STEEL REINFORCEMENT FOR BLOCKOUT MUST MATCH ROADWAY REINFORCEMENT.

1/1

Revision Date: 09/06

Scale : N/A Date : 07/21/06	GARLAND ENGINEERING STANDARD DETAILS	WASTEWATER MANHOLE BLOCKOUTS FOR ALL NEW PAVEMENT	PAGE 12
Design :			
Drawn : JMK			
Dwg. File : PAV_010.DWG			
Project No. : STANDARD-DETAILS			