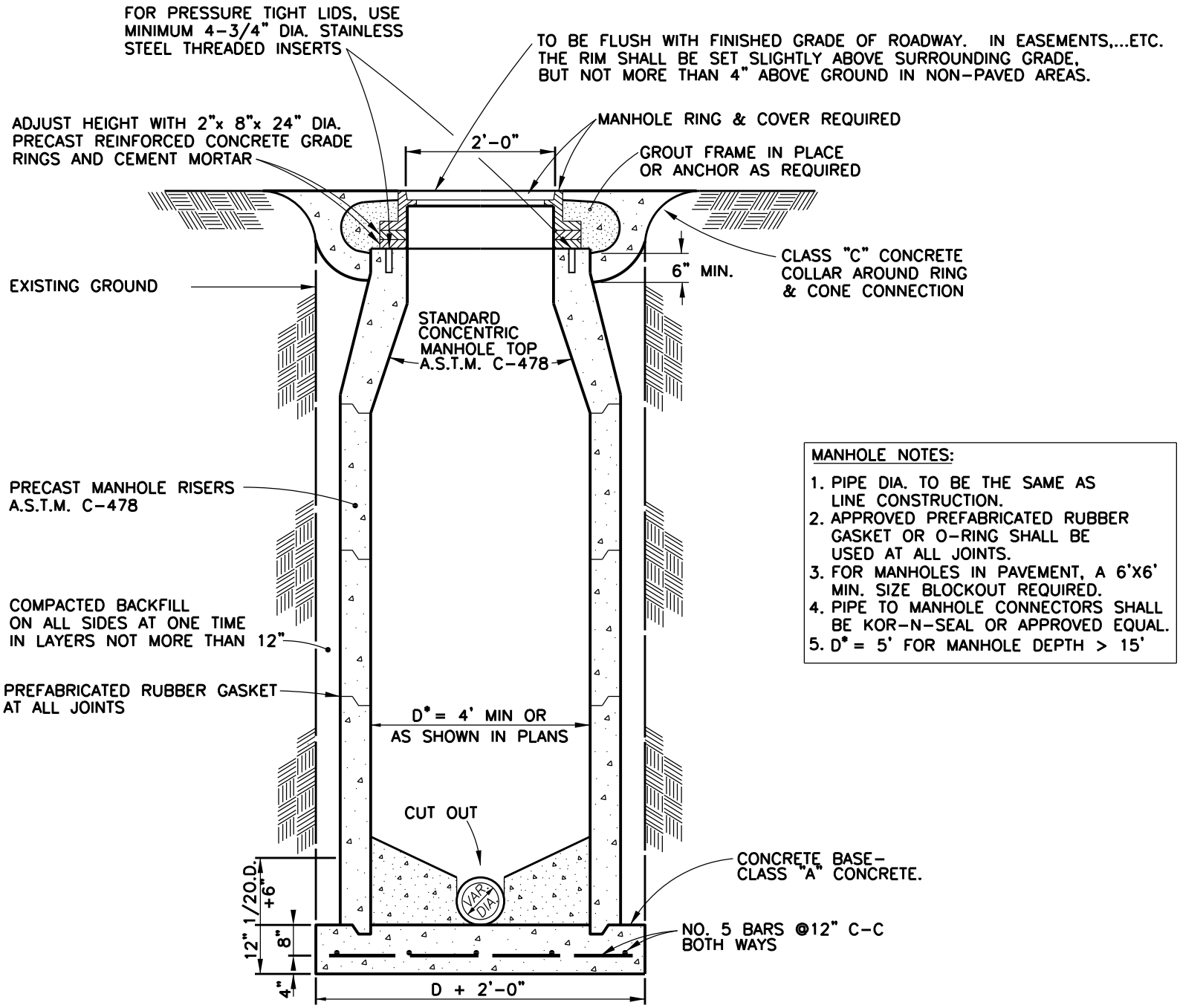

MANHOLE NOTES:

1. PIPE DIA. TO BE THE SAME AS LINE CONSTRUCTION.
2. APPROVED PREFABRICATED RUBBER GASKET OR O-RING SHALL BE USED AT ALL JOINTS.
3. FOR MANHOLES IN PAVEMENT, A 6'X6' MIN. SIZE BLOCKOUT REQUIRED.
4. PIPE TO MANHOLE CONNECTORS SHALL BE KOR-N-SEAL OR APPROVED EQUAL.
5. D* = 5' FOR MANHOLE DEPTH > 15'

Revision Date: 06/08

Scale : N/A Date :
Design :
Drawn : JMK
Dwg. File : MHO_001.DWG
Project No. : STANDARD-DETAILS

GARLAND ENGINEERING

STANDARD DETAILS

STANDARD WASTEWATER MANHOLE

1

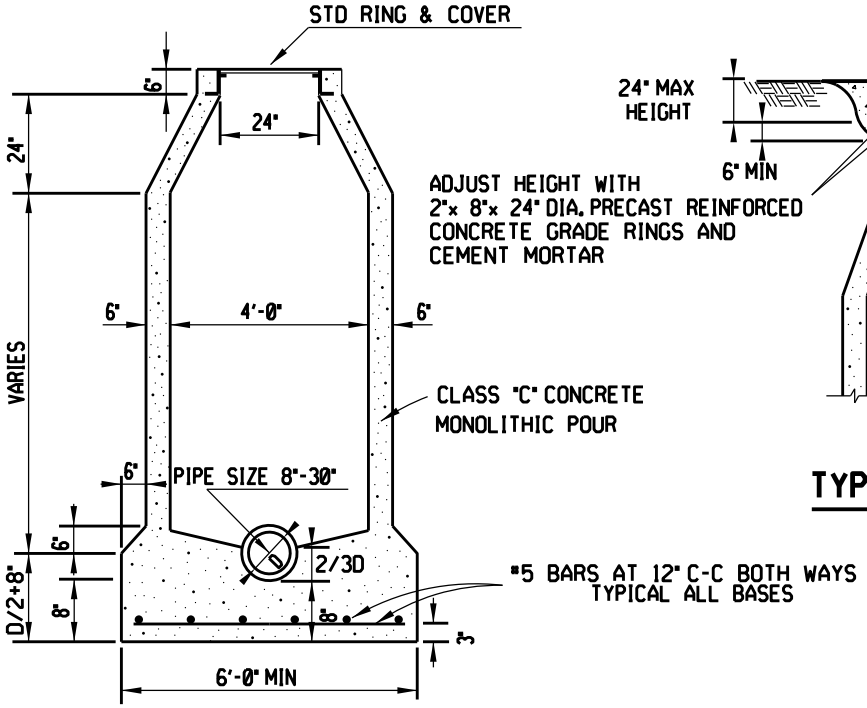

NOTE: AT 90 DEG INTERSECTION MAX PIPE SIZE 24"

STANDARD CAST-IN-PLACE MANHOLE

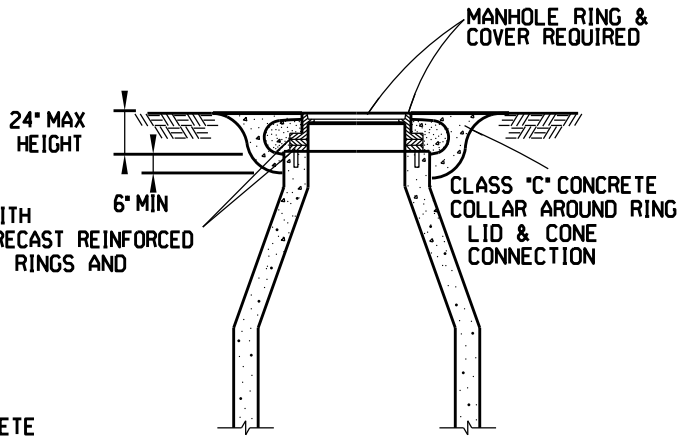

TYPICAL SECTION

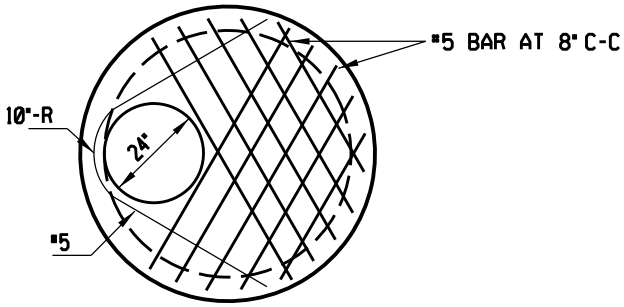

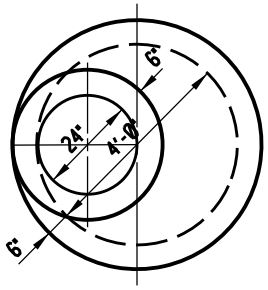

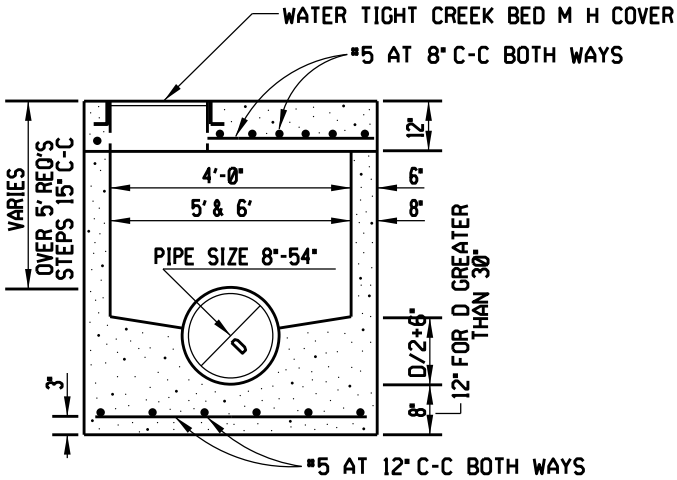

CAST-IN-PLACE TYPE S MANHOLE

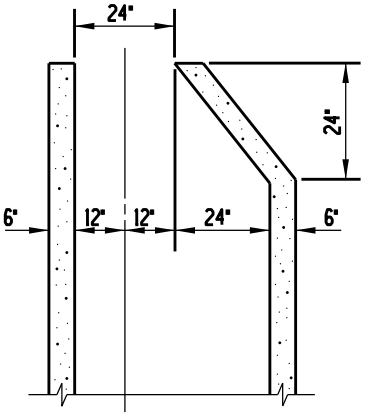

ALTERNATE CONE

L
2

Revision Date: 04/20/12			
Scale : N/A Date : 12/01/11	GARLAND ENGINEERING STANDARD DETAILS	CAST IN PLACE MANHOLE DETAIL	PAGE 2
Design :			
Drawn : JMK			
Dwg. File : REV5140			
Project No.: STANDARD-DETAILS			

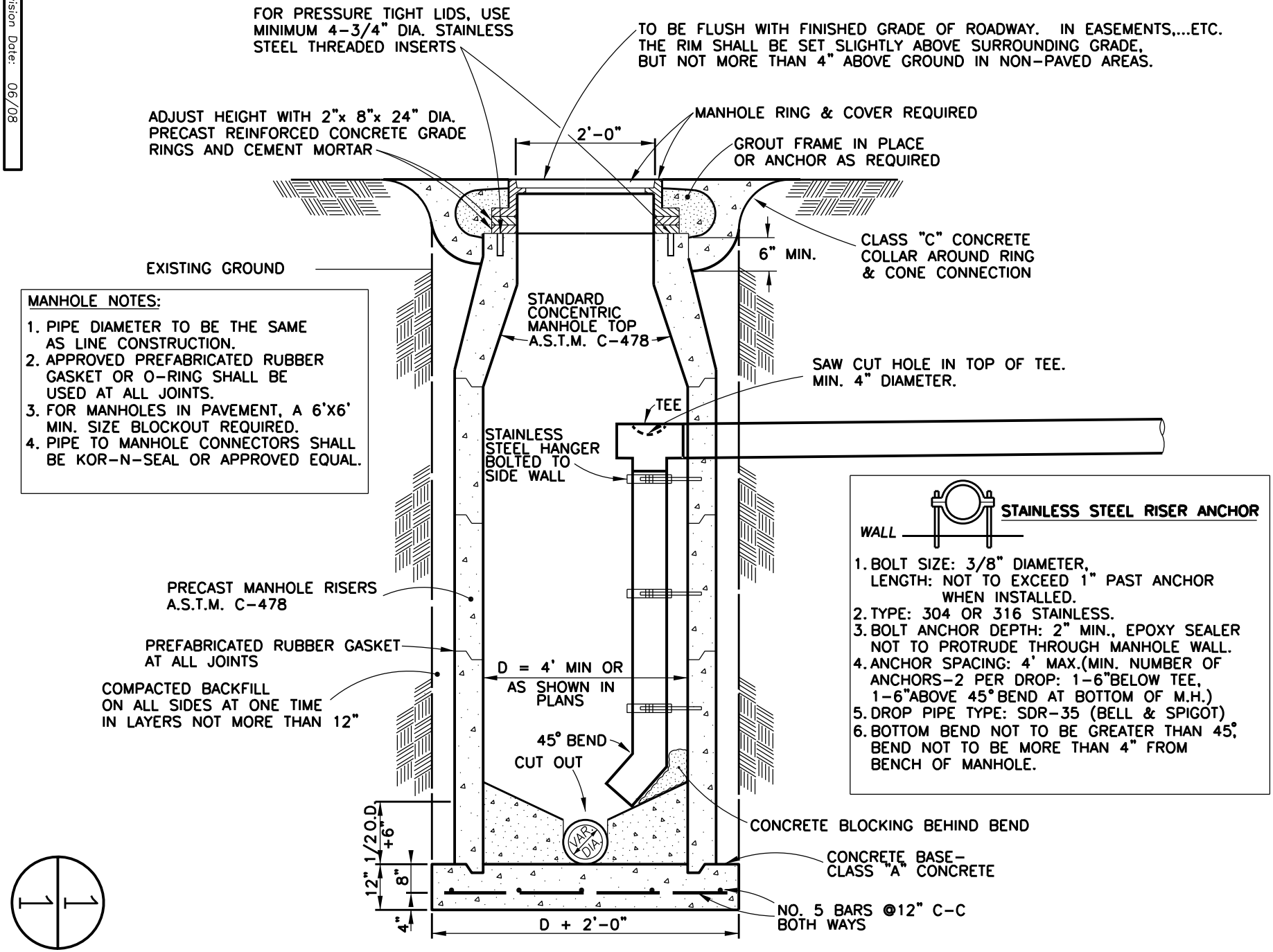

MANHOLE NOTES:

1. PIPE DIAMETER TO BE THE SAME AS LINE CONSTRUCTION.
2. APPROVED PREFABRICATED RUBBER GASKET OR O-RING SHALL BE USED AT ALL JOINTS.
3. FOR MANHOLES IN PAVEMENT, A 6'X6' MIN. SIZE BLOCKOUT REQUIRED.
4. PIPE TO MANHOLE CONNECTORS SHALL BE KOR-N-SEAL OR APPROVED EQUAL.

Revision Date: 06/08

Scale : N/A Date : 06/01/05
Design :
Drawn : JMK
Dwg. File : MHO_001.DWG
Project No. : STANDARD-DETAILS

GARLAND ENGINEERING

STANDARD DETAILS

INTERNAL DROP WASTEWATER MANHOLE

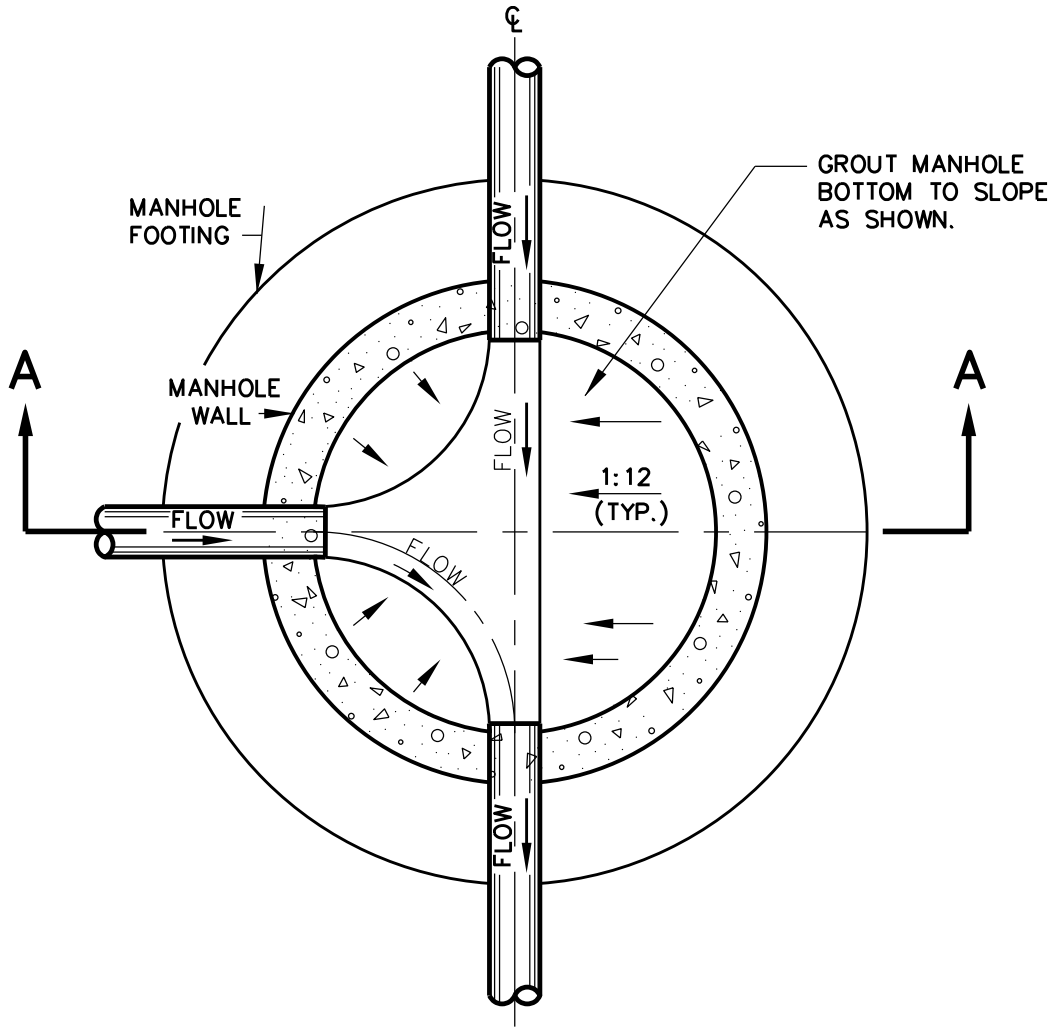

PLAN

N.T.S.

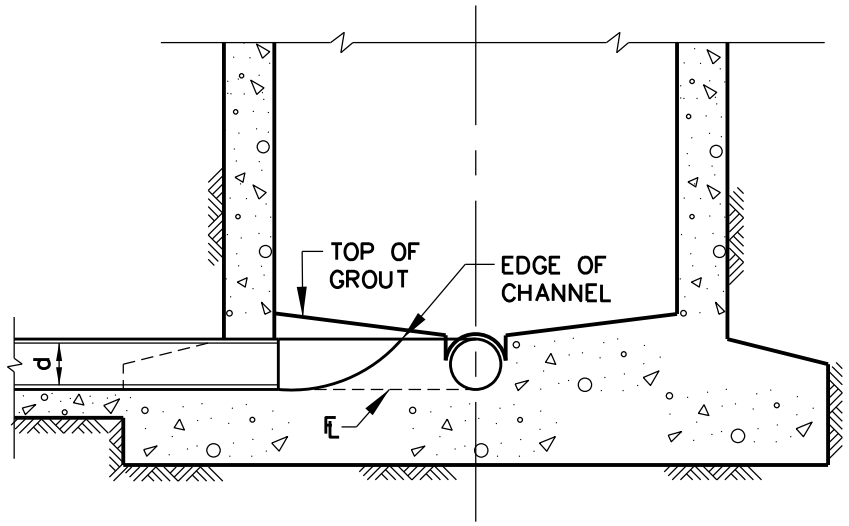

SECTION A–A

N.T.S.

1/1

Revision Date: 01/01/09

Scale : N/A Date : 06/01/05	GARLAND ENGINEERING STANDARD DETAILS	WASTEWATER MANHOLE LINE INTERSECTION	PAGE 4
Design :			
Drawn : JMK			
Dwg. File : MHL_002.DWG			
Project No. : STANDARD–DETAILS			

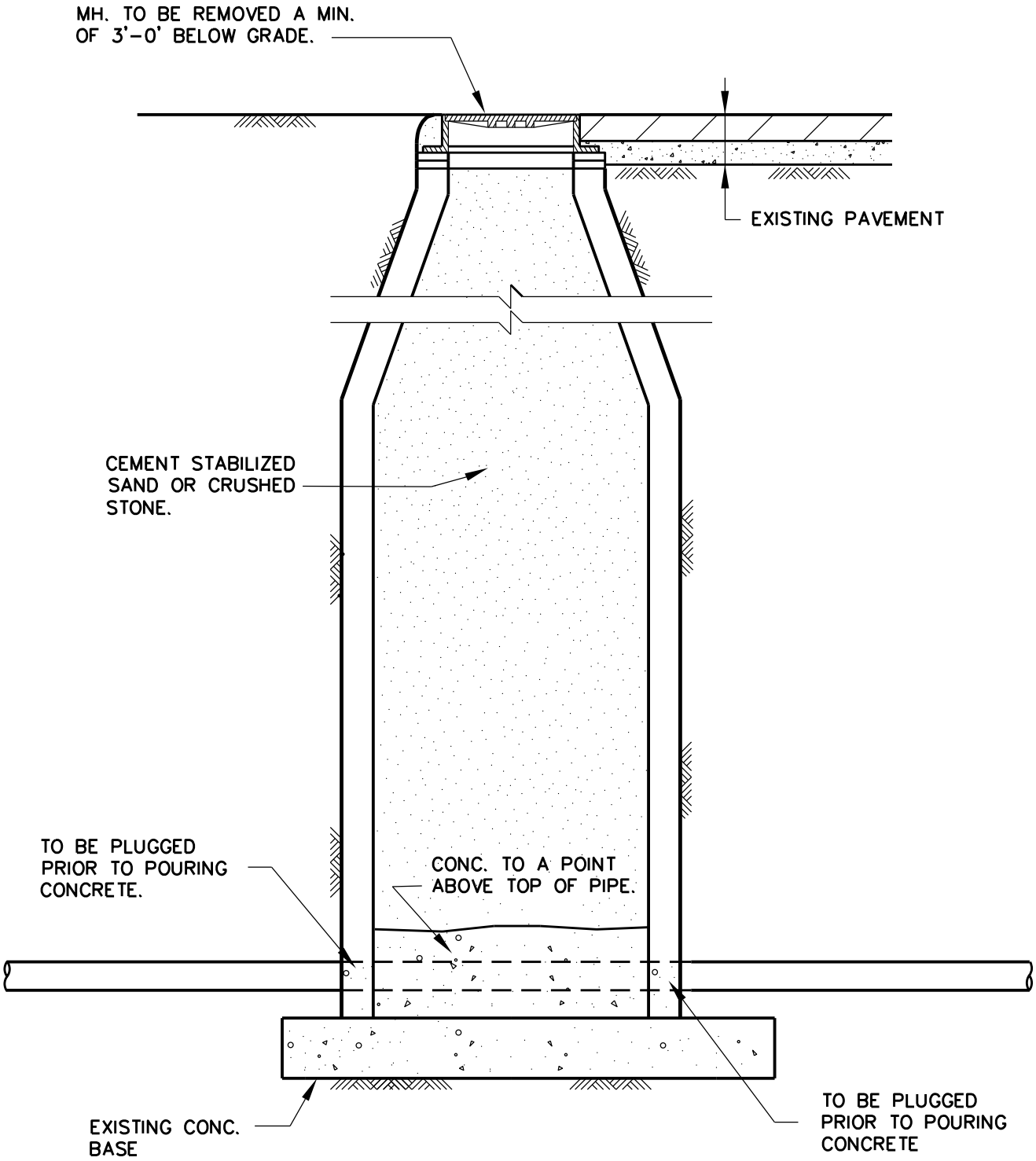

1
1

Revision Date:

Scale : N/A Date : 06/01/05	GARLAND ENGINEERING STANDARD DETAILS	ABANDONMENT OF MANHOLE	PAGE 5
Design :			
Drawn : JMK			
Dwg. File : MHL_003.DWG			
Project No. : STANDARD-DETAILS			

PAMREX 24 INCH MANHOLE COVER AND FRAME

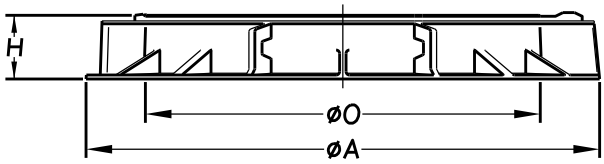

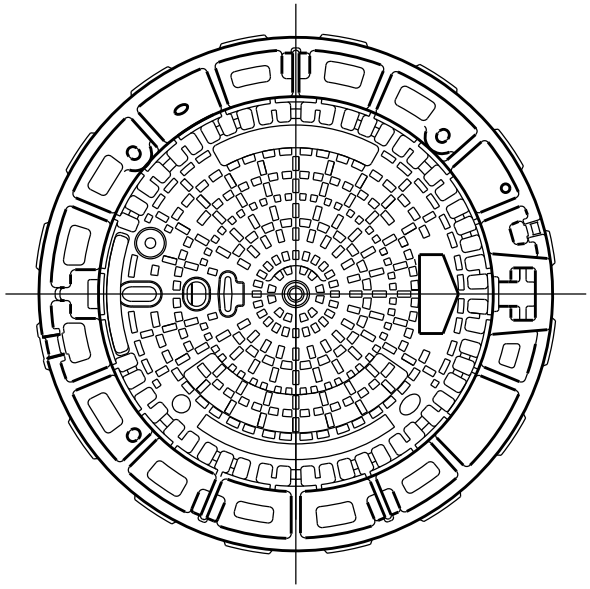

Manhole cover and frame shall be called PAMREX or approved equal. Cover and frame shall be manufactured from Ductile Iron.

Covers shall be hinged and incorporate a 90 degree blocking system to prevent accidental closure. Covers shall be one man operable using standard tools and shall be capable of withstanding a test load of 80,000 lbs.

Frames shall be circular, incorporate a seating ring and a fitted plug in the hinge housing, and be available in a 24 inch clear opening. The frame depth shall not exceed 4 inches, and the flange shall incorporate bedding slots, bolt holes, and lifting eyes.

All components shall be black coated.

Frame weight: 73 lbs.
Cover weight: 122 lbs.
Total weight: 195 lbs.

PAMREX is available from Jim Cox Sales, Inc. (800) 838-7377.

DIMENSIONS (INCHES)			WEIGHT (lbs)		REFERENCE
A	O	H	COVER AND FRAME	COVER ONLY	
33 1/2"	24	4	195	122	RE 24 R8 FD

1
1

Revision Date: 09/06

Scale : N/A Date : 09/26/06	GARLAND ENGINEERING STANDARD DETAILS	STANDARD MANHOLE FRAME AND COVER
Design :		
Drawn : JMK		
Dwg. File : MHL_004.DWG		
Project No. : STANDARD-DETAILS		

CONCRETE CONE

N.T.S.

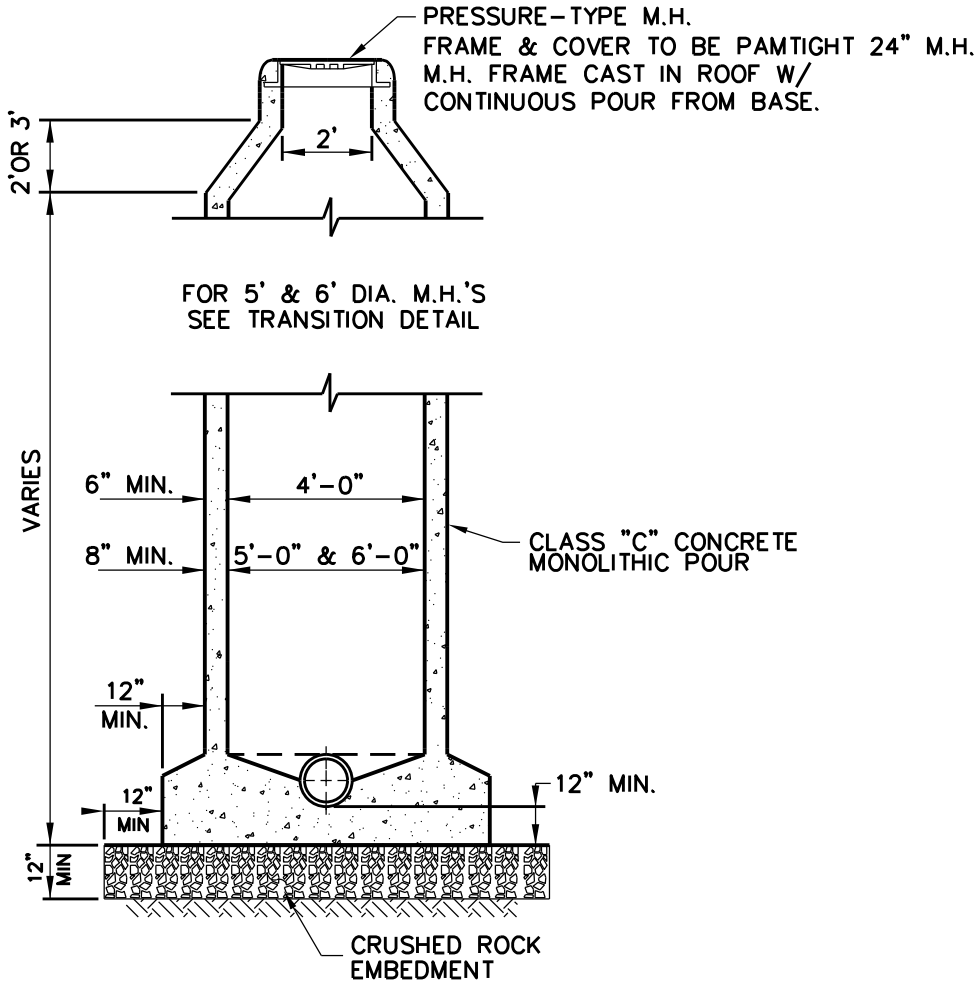

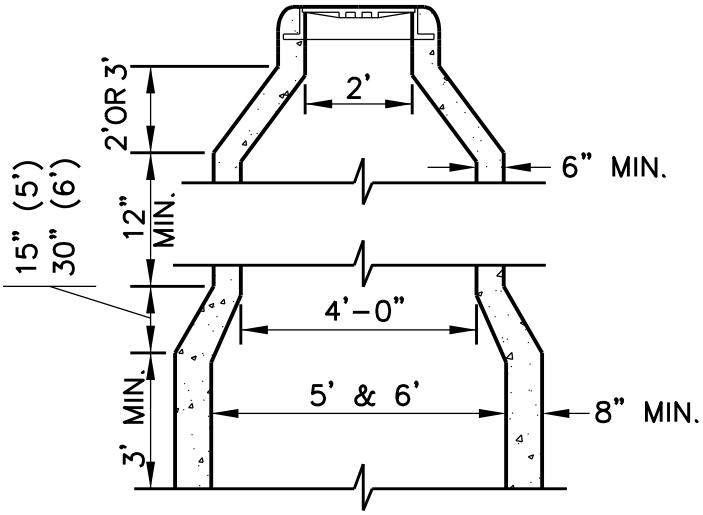

NOTE: IF PRE-CAST MANHOLE IS USED, PRE-CAST SECTIONS TO BE TIED TOGETHER WITH ENGINEERED STAINLESS STEEL STRAPPING.

TRANSITION DETAIL FOR 5' & 6' DIA. M.H.'S

N.T.S.

1/1

Revision Date: 09/06

Scale : N/A Date : 06/01/05	GARLAND ENGINEERING STANDARD DETAILS	WASTEWATER MANHOLE PRESSURE-TYPE	PAGE 7
Design :			
Drawn : JMK			
Dwg. File : MHL_005.DWG			
Project No. : STANDARD-DETAILS			

PAMTIGHT 24 INCH MANHOLE COVER AND FRAME

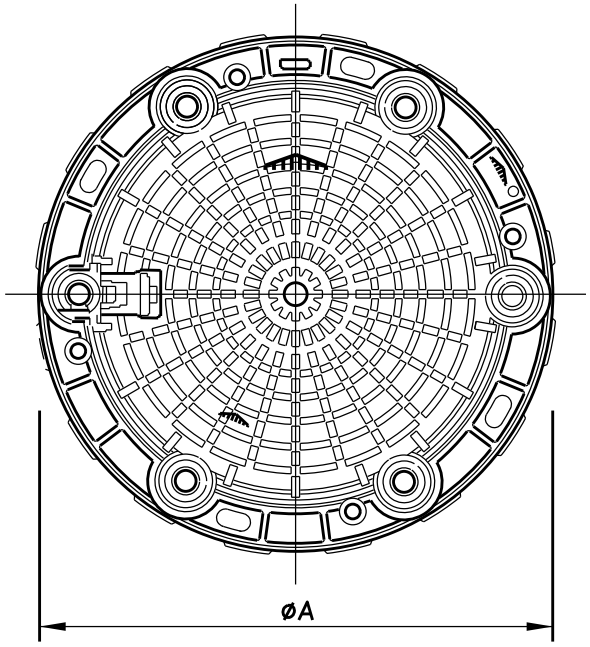

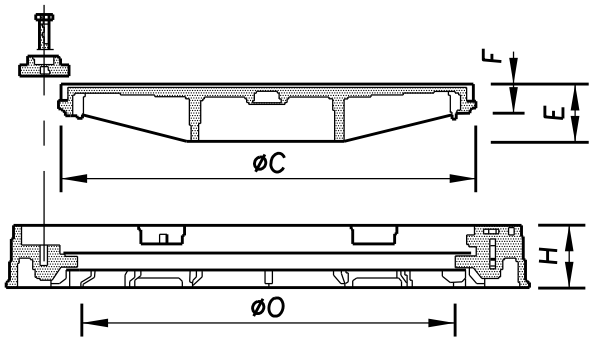

Manhole cover and frame shall be called PAMTIGHT or approved equal. Cover and frame shall be manufactured from Ductile Iron.

Covers shall be fastened to the frame by six clamping claws held by stainless steel bolts. Covers shall incorporate a sealed handling box and be one man operable using standard tools, and shall be capable of withstanding a test load of 80,000 lbs.

Frames shall be circular and be available in a 24 inch clear opening. The frame depth shall not exceed 4 inches, and the flange shall incorporate bedding slots and bolt holes.

Cover and frame shall incorporate a seating ring to prevent the ingress and escape of air and water to 1 bar positive or negative rating.

Cover and frame shall be black coated.

Frame weight: 109 lbs. Cover weight: 116 lbs. Total weight: 225 lbs.

PAMTIGHT is available from Jim Cox Sales, Inc. 800-838-7377

DIMENSIONS (INCHES)						ASSEMBLY		COVER
A	C	E	F	H	O	REFERENCE	WEIGHT (LBS)	WEIGHT (LBS)
35	28	4	2	4	24	RE 61 R1 FD	225	116

1/1

Revision Date: 09/06

Scale : N/A Date : 09/26/06	GARLAND ENGINEERING STANDARD DETAILS	PRESSURE TYPE MANHOLE FRAME AND COVER	PAGE 8
Design :			
Drawn : JMK			
Dwg. File : MHL_006.DWG			
Project No. : STANDARD-DETAILS			