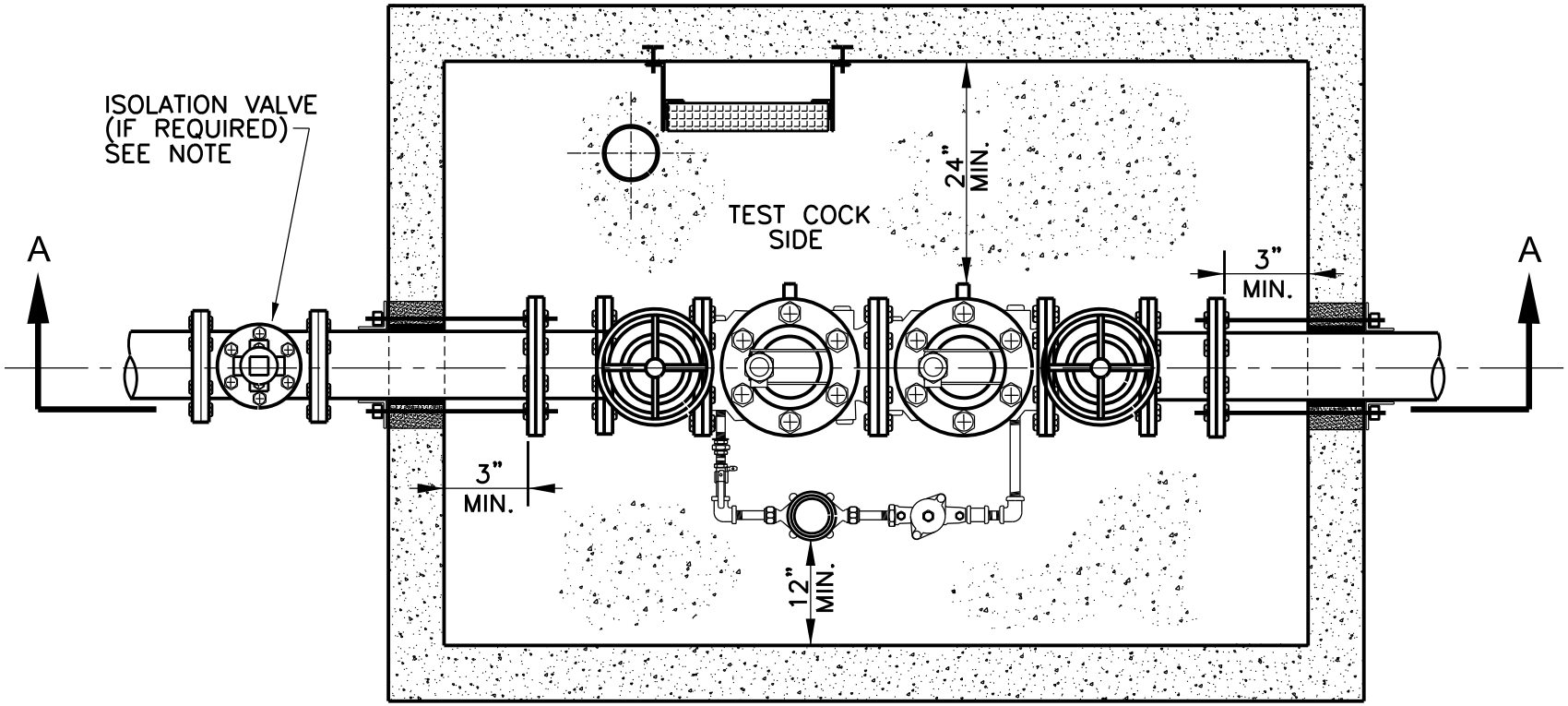

PLAN

NOTE:

AN ISOLATION VALVE IS REQUIRED TO SHUT OFF WATER TO THE FIRE SPRINKLER VAULT. IF A TAPPING VALVE AND SLEEVE IS USED, NO SEPARATE ISOLATION VALVE IS REQUIRED. THE ISOLATION VALVE MUST BE AN AMERICAN FLOW CONTROL SERIES 500 RESILIENT WEDGE VALVE OR EQUAL.

1/6

Revision Date: 03/06

Scale : N/A Date : 06/01/05
Design :
Drawn : GAV
Dwg. File : DBCHAS_001.DWG
Project No. : STANDARD-DETAILS

GARLAND ENGINEERING
STANDARD DETAILS

BACKFLOW DEVICE VAULT
FOR 3", 4", 6" & 8"
(FOR FIRE SPRINKLER SYSTEMS ONLY)

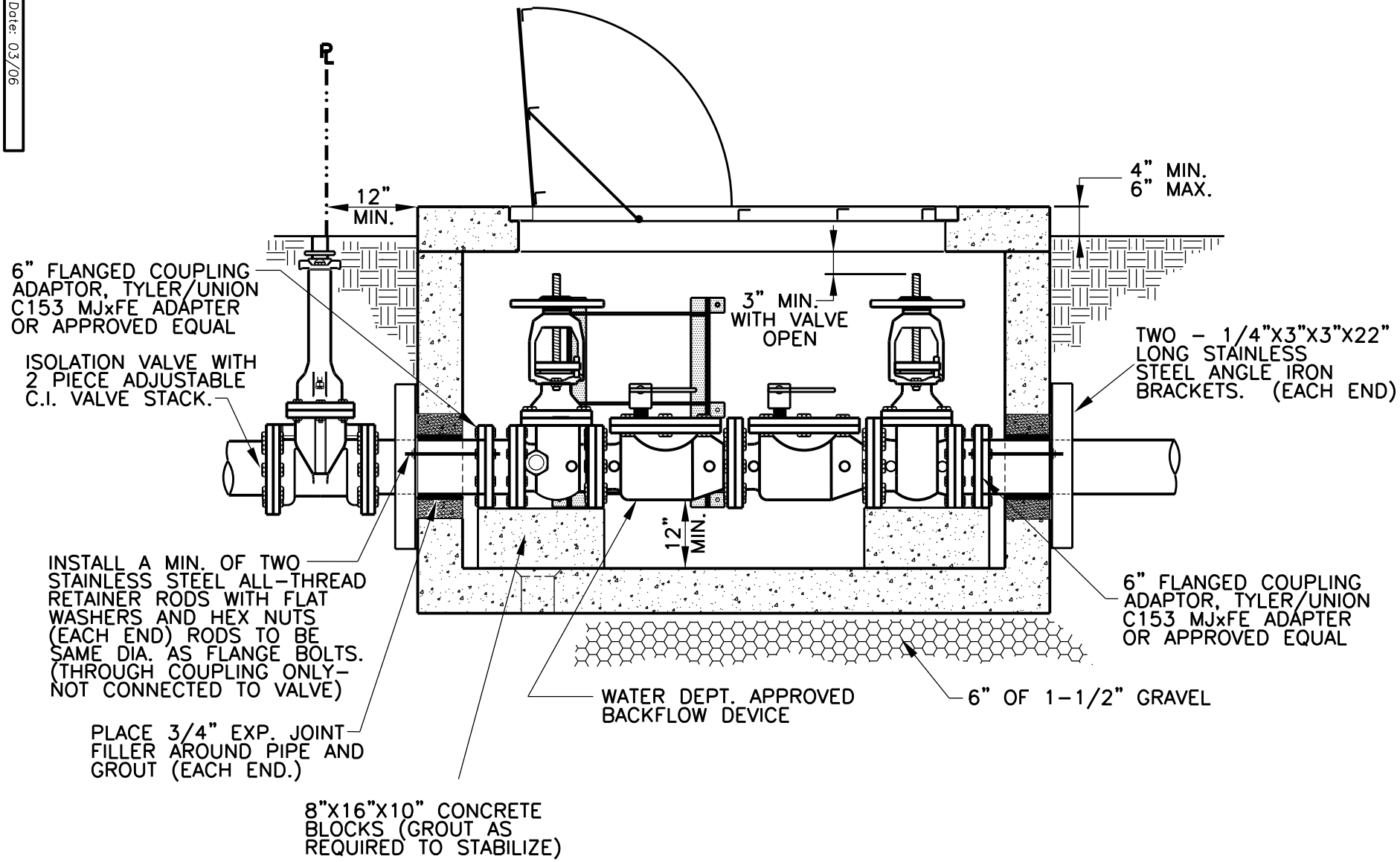

SECTION A–A

BACKFLOW DEVICE VAULT

2/6

Revision Date: 03/06

Scale : N/A Date : 06/01/05
Design :
Drawn : GAV
Dwg. File : DBCHAS_001.DWG
Project No. : STANDARD-DETAILS

GARLAND ENGINEERING

STANDARD DETAILS

BACKFLOW DEVICE VAULT
FOR 3", 4", 6" & 8"
(FOR FIRE SPRINKLER SYSTEMS ONLY)

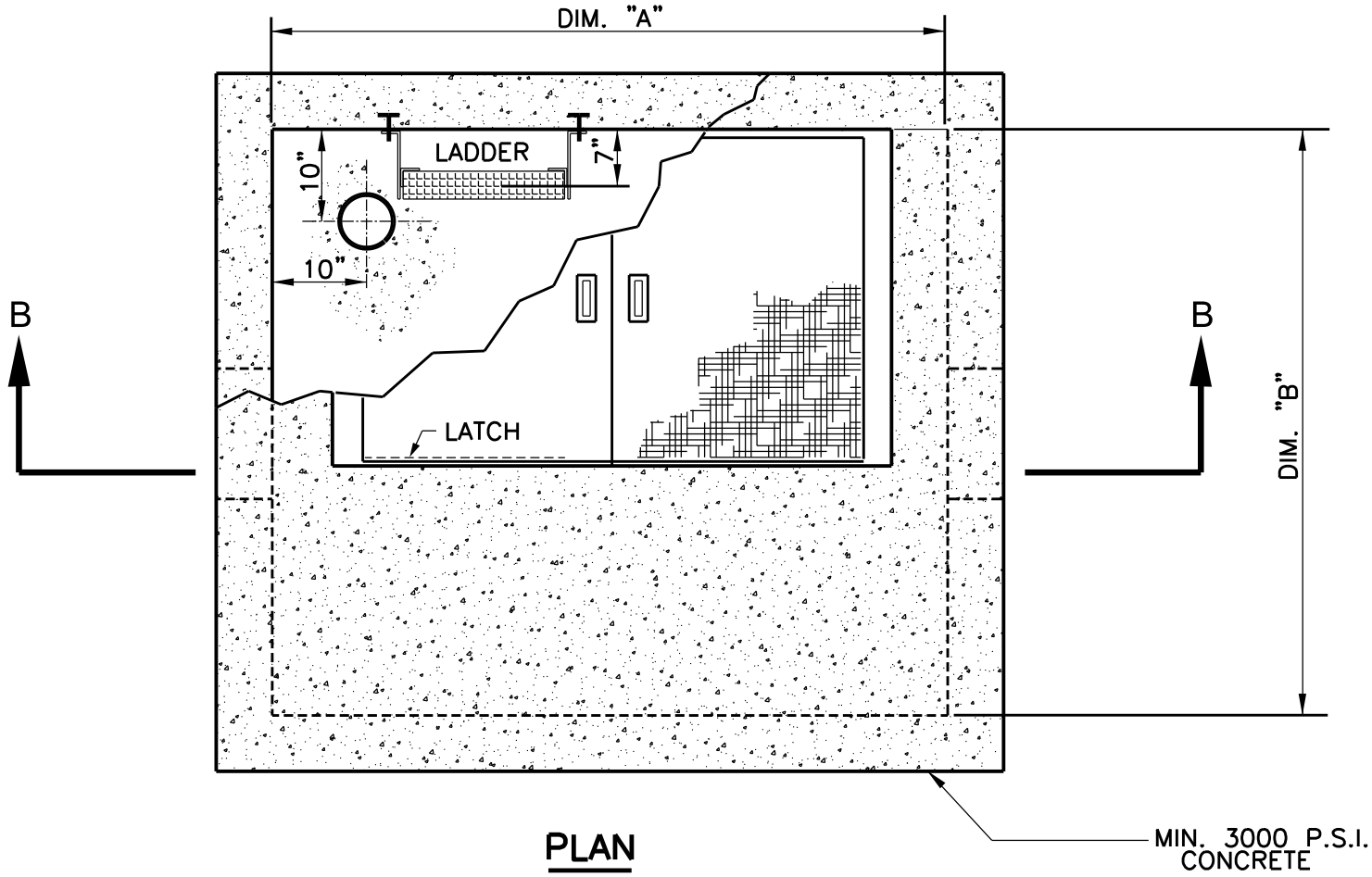

PLAN

CONCRETE VAULT DIMENSION TABLE			
DOUBLE DETECTOR SIZE	MIN. INTERIOR WIDTH DIM. "A"	MIN. INTERIOR LENGTH DIM. "B"	MIN. INTERIOR HEIGHT DIM. "C"
4"	5'-0"	4'-0"	AS NEEDED FOR VALVE STEM CLEARANCE (SEE SECTION A-A)
6"	6'-0"	4'-6"	
8"	7'-0"	5'-0"	

NOTE: ALTERNATE VAULT SIZES WILL BE CONSIDERED BY THE WATER DEPT. ON A CASE BY CASE BASIS.

3/6

Revision Date: 03/06

Scale : N/A Date : 06/01/05
Design :
Drawn : GAV
Dwg. File : DBCHAS_001.DWG
Project No. : STANDARD-DETAILS

GARLAND ENGINEERING
STANDARD DETAILS

BACKFLOW DEVICE VAULT FOR 3", 4", 6" & 8" (FOR FIRE SPRINKLER SYSTEMS ONLY)

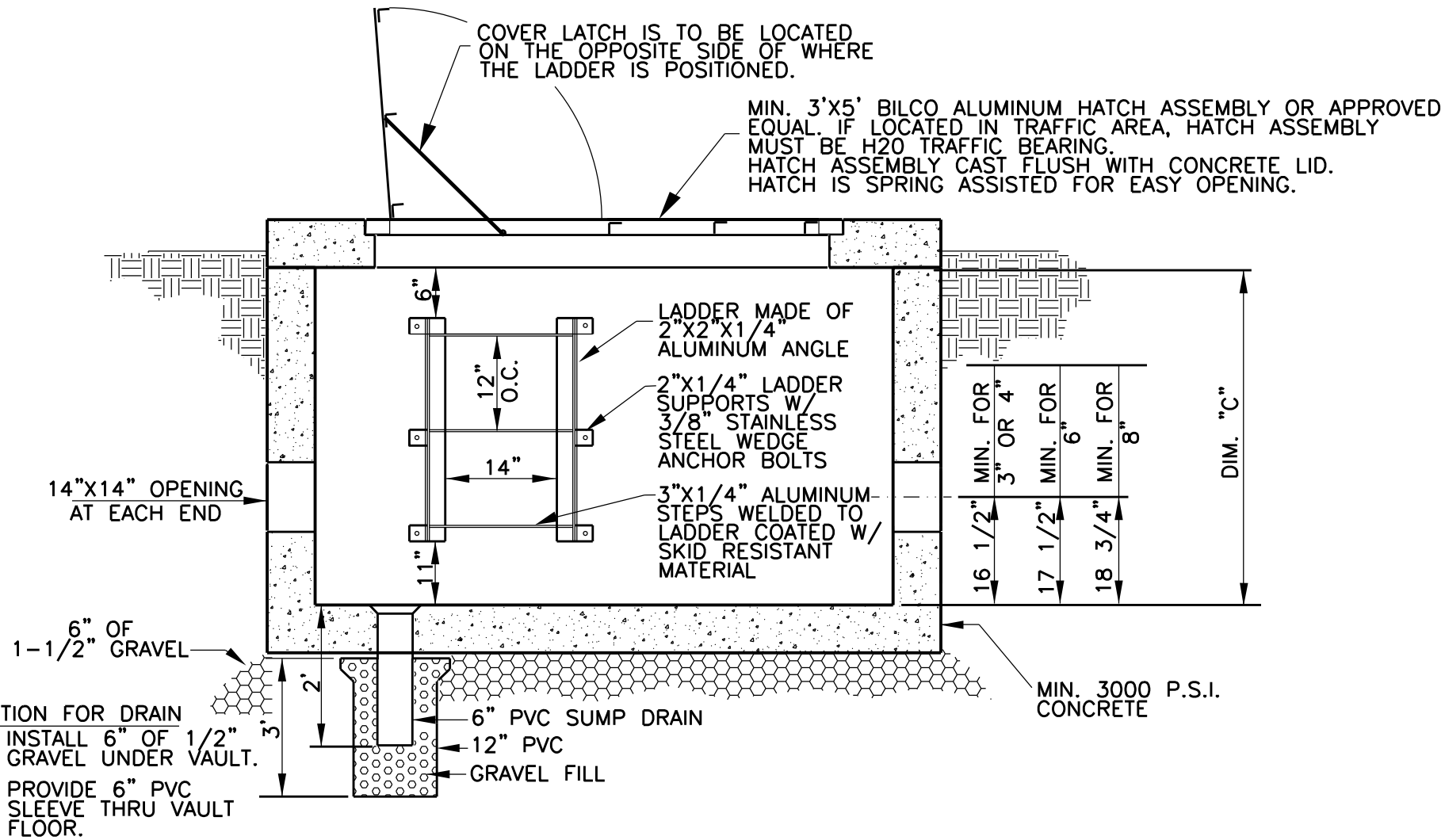

SECTION B-B

CONCRETE VAULT FOR 3", 4", 6" & 8" BACKFLOW DEVICE VAULT

4/6

Revision Date: 09/06

Scale : N/A Date : 06/01/05
Design :
Drawn : GAV
Dwg. File : DBCHAS_001.DWG
Project No. : STANDARD-DETAILS

GARLAND ENGINEERING

STANDARD DETAILS

BACKFLOW DEVICE VAULT FOR 3", 4", 6" & 8" (FOR FIRE SPRINKLER SYSTEMS ONLY)

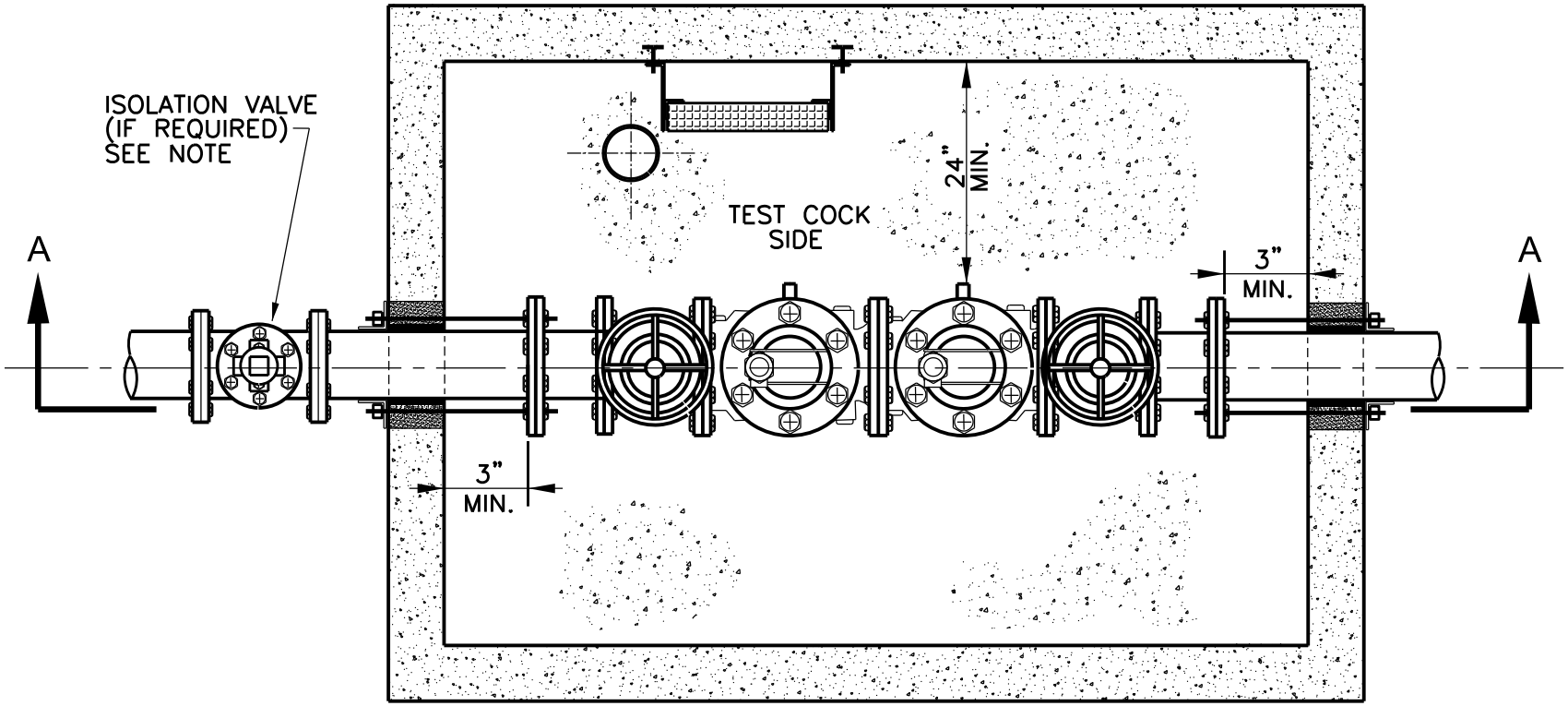

PLAN

NOTE:

AN ISOLATION VALVE IS REQUIRED TO SHUT OFF WATER TO THE VAULT.
IF A TAPPING VALVE AND SLEEVE IS USED, NO SEPARATE ISOLATION VALVE IS REQUIRED.
THE ISOLATION VALVE MUST BE AN AMERICAN FLOW CONTROL SERIES 500 RESILIENT WEDGE VALVE OR EQUAL.

Revision Date: 09/06

Scale : N/A Date : 03/17/06
Design :
Drawn : GAV
Dwg. File : DBCHAS_001.DWG
Project No. : STANDARD-DETAILS

GARLAND ENGINEERING
STANDARD DETAILS

BACKFLOW DEVICE VAULT
FOR 3", 4", 6" & 8"

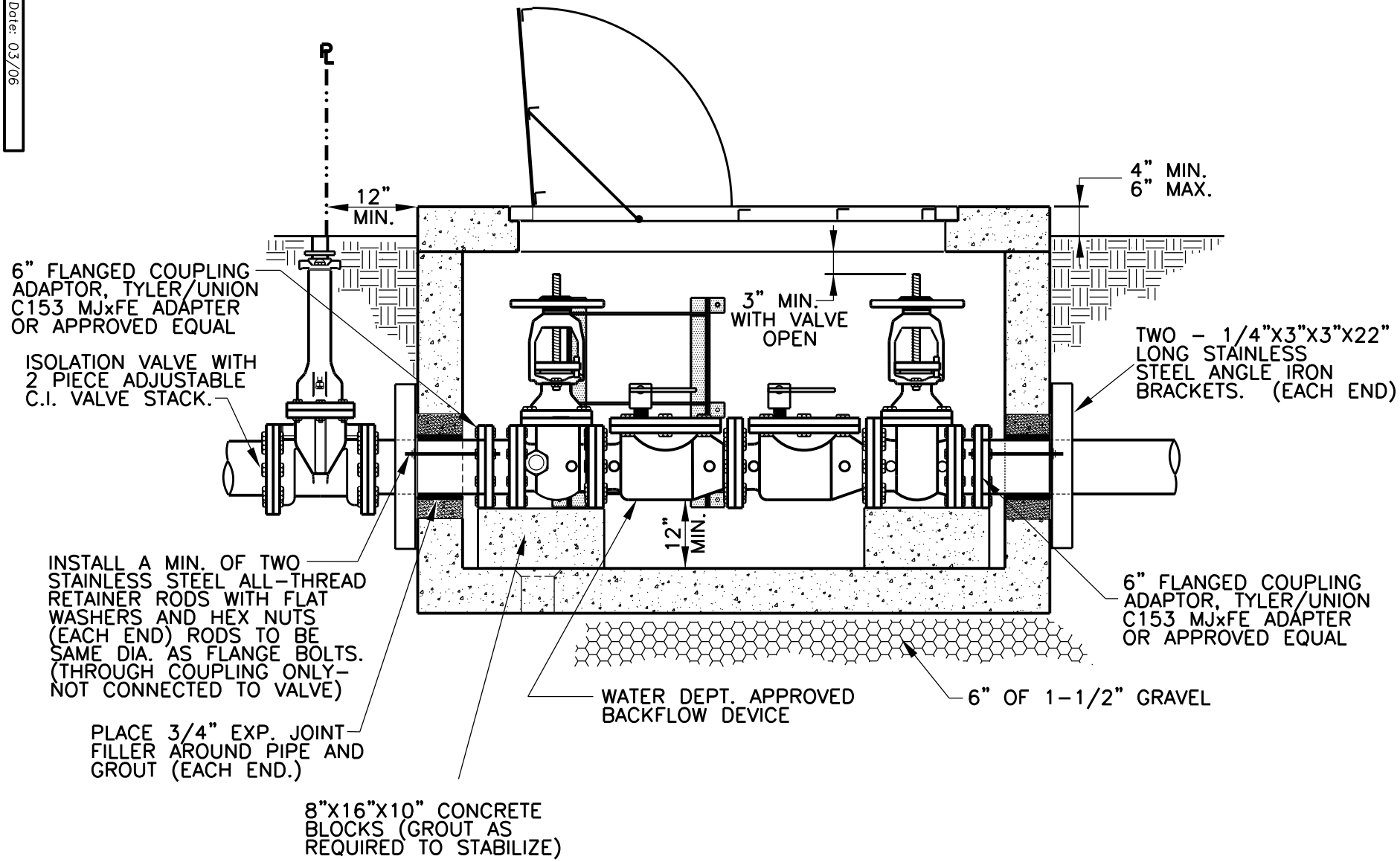

SECTION A–A

BACKFLOW DEVICE VAULT

Revision Date: 03/06

Scale : N/A Date : 03/17/06
Design :
Drawn : GAV
Dwg. File : DBCHAS_001.DWG
Project No. : STANDARD-DETAILS

GARLAND ENGINEERING

STANDARD DETAILS

BACKFLOW DEVICE VAULT FOR 3", 4", 6" & 8"

6 | 6

PAGE 6